YAMAHA

PARTS CATALOGUE

YXR70FX (5B48) U.S.A.

1G5B4-110E1

( )

YAMAHA GENUINE Parts & Accessories

2012/11/20

NEWS NO.	DATE	COMMENT
PE0-MC-080068	Oct.,27,2008	FIG.11 THROTTLE BODY ASSY 1 LIST/ILLUST. CORRECTION
PE0-MC-090024	Apr.,28,2009	FIG.17 TRANSMISSION LIST/ILLUST. REVISION
PE0-MC-100042	Dec.,22,2010	FIG.31or 32 SEAT ILLUST. CORRECTION
PE0-MC-120103	Oct.,24,2012	COR: YFM700,YXR700(3B4/43P/5C0,5B4/42S) CLUTCH LIST CORRECTION

YXR70FX
PARTS CATALOGUE
©2007 by Yamaha Motor Co., Ltd.
1st edition, October 2007
All rights reserved.
Any reprinting or unauthorized use
without the written permission of
Yamaha Motor Co., Ltd.
is expressly prohibited.
Printed in Japan.

FOREWORD

This Parts Catalogue is related to the parts for the model(s) on the cover page. When you are ordering replacement parts, please refer to this Parts Catalogue and quote both part numbers and part names correctly.

1. Modifications or additions which have been made after the issue of the Parts Catalogue will be announced in the Parts News.
   It is advisable that you make the necessary corrections to the Parts Catalogue according to the Parts News.

2. Abbreviations
   The following abbreviations are used in this Parts Catalogue.

   “UR” Use specified parts number.
   “UN” Use as many as needed.
   “AP” Alternate Parts
   “LM” Locally Made (Parts need to be ordered locally)
   “F#” Frame No. (Applicable machine No.)
   “O/S” Over Size

3. The number of components for assembly
   - Parts, which are to be supplied in an assembly, are listed with a dot (.) in front of the part name as shown below.
   - The numeral appearing to the right of each component part indicates the quantity of parts for each assembly unit.

PART NO.	DESCRIPTION	Q’TY	REMARKS
2F5–83310–60	FRONT FLASHER LIGHT ASSY	2	
115–83311–60	.BULB (6V–18W)	1	

4. Applicable colours of graphics are represented in the “REMARKS” as shown below.

PART NO.	DESCRIPTION	Q’TY	REMARKS
2N4–24110–00–X5	FUEL TANK COMP.	2	MXR
3J1–24240–10	.GRAPHIC, FUEL TANK	1	FOR MXR

5. Note that the illustrations for reference in finding parts numbers are not to be used for assembling. When assembling, please use the applicable service manual.

6. The asterisk (*) before a reference number indicates modified items after the first edition.

7. Applicable Serial No.

Engine Serial No.

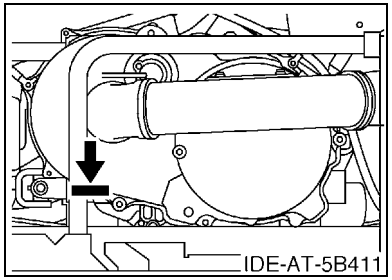

Frame Serial No.

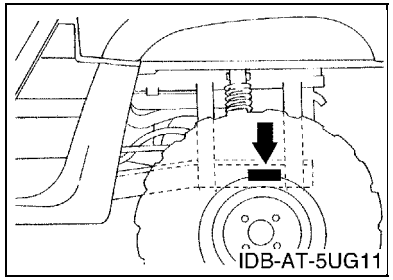

8. Applicable Colour Code (The (*) mark shows Model colour.)

Abbreviation	Colour Name	Colour Code
YB(*)	YAMAHA BLACK	0033

9. Quantity Column Information

Column No.	Name Of Q’ty Column	Destination
1	USA	U.S.A.

MODEL LABEL

(1) A label called “Model Label” is affixed in the location as indicated in (3) below. When using this parts catalogue, please be sure to cross–reference the “model code – production code No.” in the catalogue with the “model code – production code No.” indicated on the Model Label affixed onto the product concerned.

(2) “Model Label” Indication

a b
○ xxxx – xxx
● x c

a: Model Type Code
b: Production Code No.
c: Colouring Type

○ 4TW1–010
● A

(3) Model Label Affixing Location

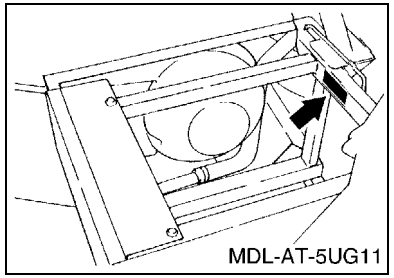

(4) Colouring Information

Model Code	Colouring Type Code	Colour Code	Colour Name	Abbreviation
5B48	M	0033	YAMAHA BLACK	YB

(5) Model Code – Production Code Number of Model Listed in This Parts Catalogue

Model Code	Production Code No.	Country (destination)	Model Code	Production Code No.	Country (destination)
5B48	010	U.S.A.			

CONTENTS

ENGINE

CYLINDER HEAD 1
CYLINDER 2
CRANKSHAFT & PISTON 3
VALVE 5
CAMSHAFT & CHAIN 6
WATER PUMP 7
RADIATOR & HOSE 8
OIL PUMP 10
OIL PIPE 11
INTAKE 12
THROTTLE BODY ASSY 1 14
EXHAUST 15
CRANKCASE 16
CRANKCASE COVER 1 17
STARTER CLUTCH 19
CLUTCH 20
TRANSMISSION 22
MIDDLE DRIVE GEAR 24
SHIFT CAM & FORK 26
SHIFT SHAFT 27

CHASSIS

FRAME 28
FRONT FENDER 29
SIDE COVER 31
REAR ARM 34
DRIVE SHAFT 35
FRONT DIFFERENTIAL 38
REAR SUSPENSION 40
FRONT SUSPENSION & WHEEL 41
STEERING 42
FUEL TANK 43
SEAT 44
FRONT WHEEL 46
FRONT WHEEL 2 48
FRONT BRAKE CALIPER 50
REAR WHEEL 51
REAR WHEEL 2 53
REAR BRAKE CALIPER 55
REAR BRAKE CALIPER 2 56
STAND & FOOTREST 58
REAR MASTER CYLINDER 60
CARRIER 62
GUARD 64
GUARD 2 65
GENERATOR 66
STARTING MOTOR 67
METER 68
HEADLIGHT 69
TAILLIGHT 70
ELECTRICAL 1 71
ELECTRICAL 2 73
EMBLEM & LABEL 1 75

INDEX

NUMERICAL INDEX 76

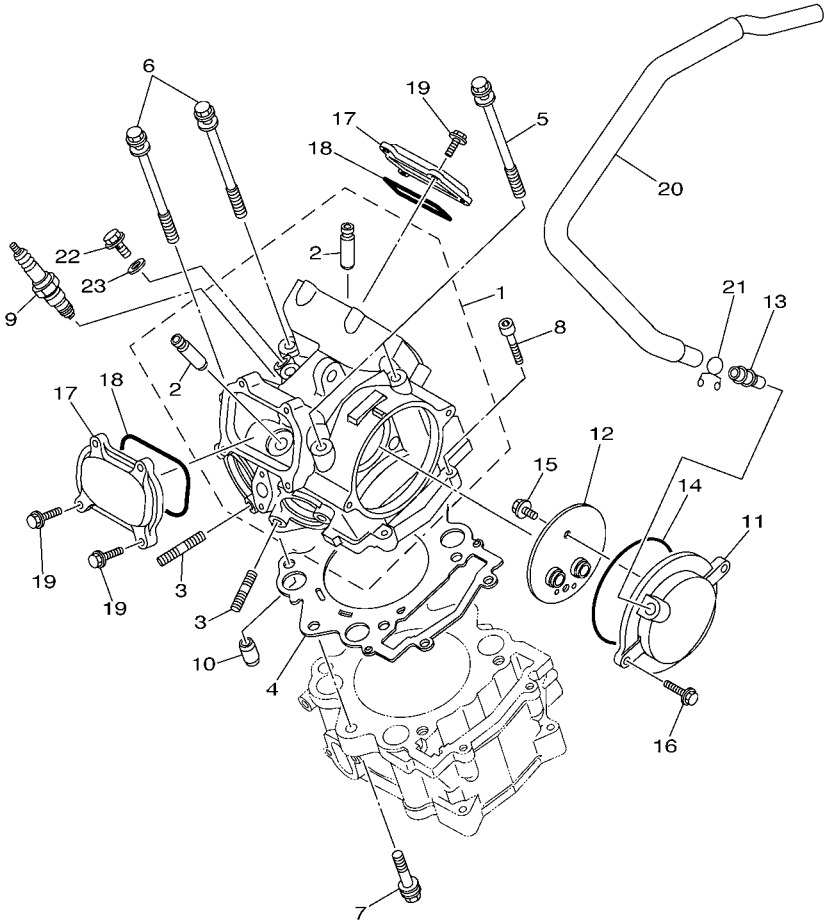

5B41100-G010

FIG. 1 CYLINDER HEAD

REF. NO.	PART NO.	DESCRIPTION	USA					REMARKS
1	5B4–11102–00	CYLINDER HEAD ASSY	1					
2	4G0–11133–11	.GUIDE, VALVE 1	4					
3	95612–08625	BOLT, STUD	4					
4	3B4–11181–00	GASKET, CYLINDER HEAD 1	1					
5	90109–09003	BOLT	2					
6	90109–09002	BOLT	2					
7	90109–09005	BOLT	2					
8	91312–06030	BOLT	2					
9	94701–00420	PLUG, SPARK (NGK CPR7EA)	1					
10	93612–16254	PIN, DOWEL	2					
11	5B4–11185–00	COVER, CYLINDER HEAD SIDE 1	1					
12	3B4–11165–00	PLATE, BREATHER	1					
13	371–11167–01	PIPE, BREATHER 2	1					
14	93210–96601	O-RING	1					
15	95022–06012	BOLT, FLANGE	2					
16	95022–06020	BOLT, FLANGE	2					
17	1S3–11186–00	COVER, CYLINDER HEAD SIDE 2	2					
18	93210–78544	O-RING	2					
19	95022–06020	BOLT, FLANGE	8					
20	5B4–11166–00	PIPE, BREATHER 1	1					
21	90467–140A4	CLIP	1					
22	90401–08004	BOLT, UNION	1					
23	90430–08119	GASKET	1					

FIG. 2 CYLINDER

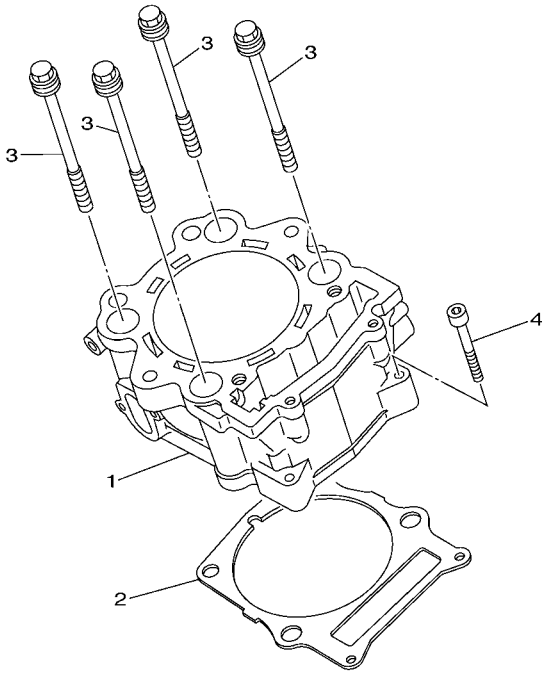

5B41100-G020

REF. NO.	PART NO.	DESCRIPTION	USA					REMARKS
1	3B4–11311–10	CYLINDER 1	1					
2	1S3–11351–00	GASKET, CYLINDER	1					
3	90119–10023	BOLT, WITH WASHER	4					
4	91312–06040	BOLT	2					

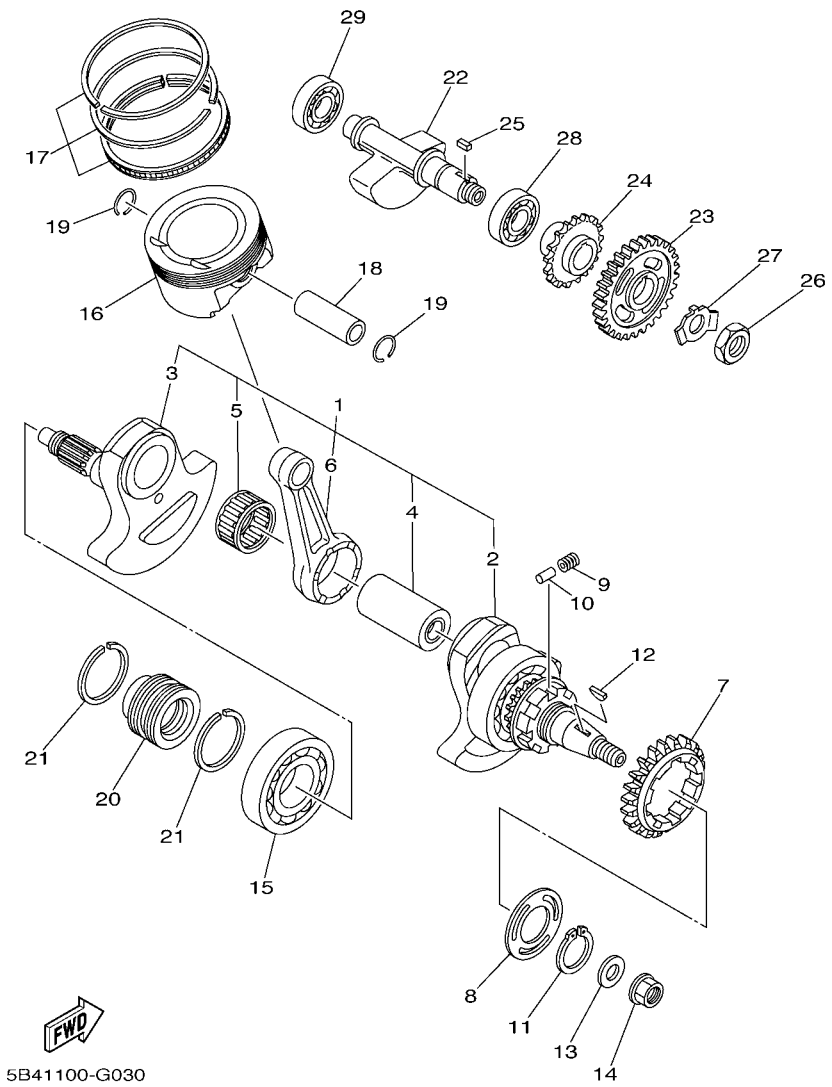

FIG. 3 CRANKSHAFT & PISTON

REF. NO.	PART NO.	DESCRIPTION	USA					REMARKS
1	3B4–11400–00	CRANKSHAFT ASSY	1					
2	3B4–11401–09	.CRANK SUB ASSY 1	1					
3	3B4–11402–09	.CRANK SUB ASSY 2	1					
4	1S3–11681–00	.PIN, CRANK 1	1					
5	93310–84017	.BEARING	1					
6	1S3–11651–00	.ROD, CONNECTING	1					
7	5KM–11536–10	GEAR, DRIVE (46T)	1					
8	5KM–11565–00	WASHER, BEARING COVER	1					
9	90501–220A1	SPRING, COMPRESSION	8					
10	93606–09002	PIN, DOWEL	4					
11	99009–35400	CIRCLIP	1					
12	90280–05001	KEY, WOODRUFF	1					
13	90201–16013	WASHER, PLATE	1					
14	90179–16004	NUT	1					
15	93306–30810	BEARING	1					
16	1S3–11631–10	PISTON (STD)	1					
17	1S3–11603–10	PISTON RING SET (STD)	1					
18	5VK–11633–00	PIN, PISTON	1					
19	93450–24154	CIRCLIP	2					
20	3B4–16181–00	SPACER 1	1					
21	3B4–11447–00	SEAL, CRANK	2					
22	3B4–11454–00	WEIGHT 1	1					
23	3B4–11531–00	GEAR, BALANCE WEIGHT	1					
24	3B4–13354–00	SPROCKET, DRIVE	1					
25	90282–05007	KEY, STRAIGHT	1					
26	90170–18003	NUT	1					
27	90215–18001	WASHER, LOCK	1					

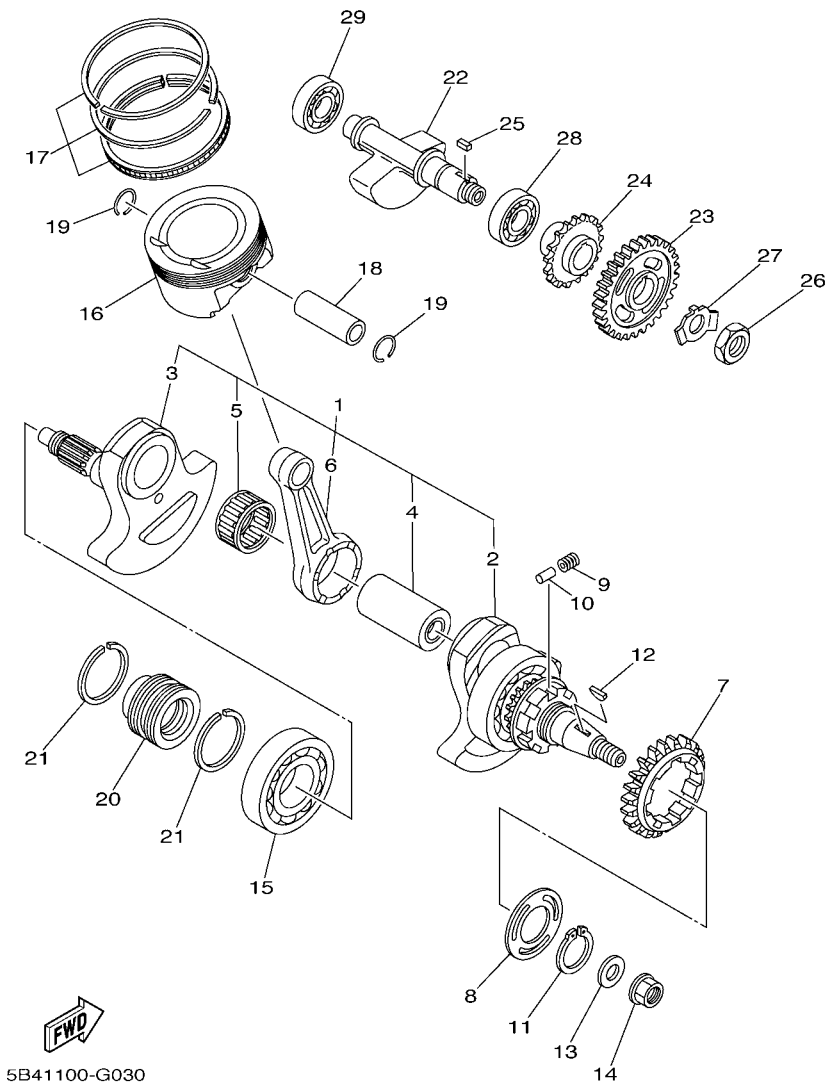

FIG. 3 CRANKSHAFT & PISTON

REF. NO.	PART NO.	DESCRIPTION	USA					REMARKS
28	93306–30534	BEARING	1					
29	93306–30438	BEARING	1					

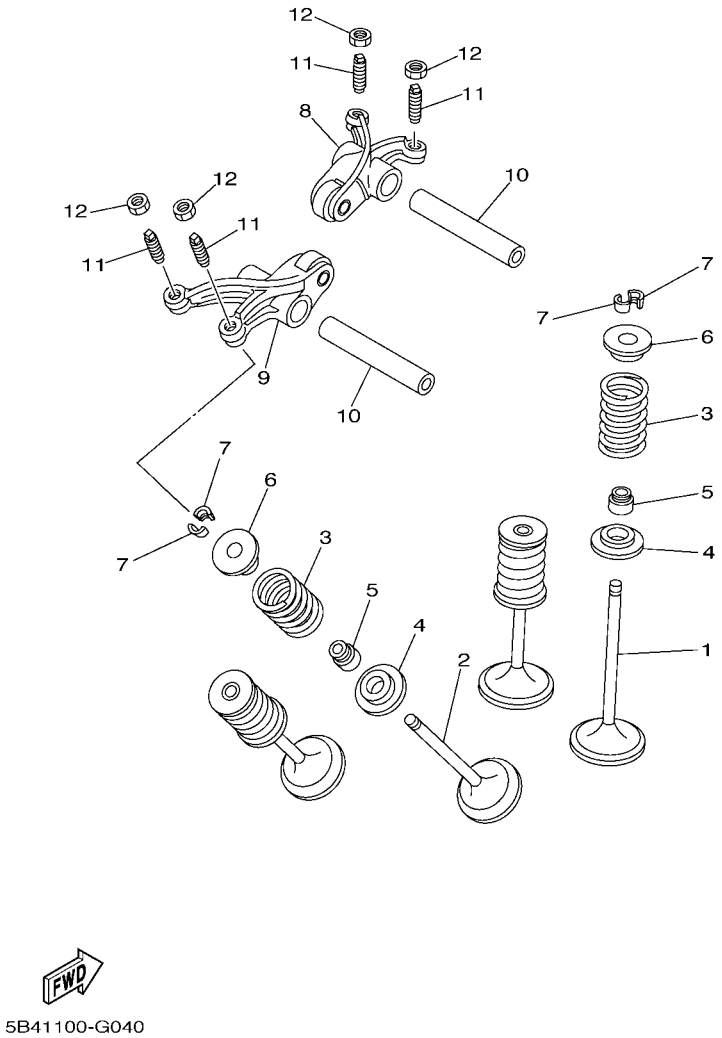

FIG. 4 VALVE

REF. NO.	PART NO.	DESCRIPTION	USA					REMARKS
1	5VK–12111–00	VALVE, INTAKE	2					
2	5VK–12121–00	VALVE, EXHAUST	2					
3	5VK–12113–00	SPRING, VALVE INNER	4					
4	3YF–12116–00	SEAT, VALVE SPRING	4					
5	5H0–12119–00	SEAL, VALVE STEM	4					
6	3YF–12117–01	RETAINER, VALVE SPRING	4					
7	4G0–12118–00	COTTER, VALVE	8					
8	5VK–12151–00	ARM, VALVE ROCKER	1					
9	5VK–12161–00	ARM, VALVE ROCKER 2	1					
10	5VK–12146–00	SHAFT, ROCKER	2					
11	5XT–12159–00	SCREW, VALVE ADJUSTING	4					
12	90170–06128	NUT	4					

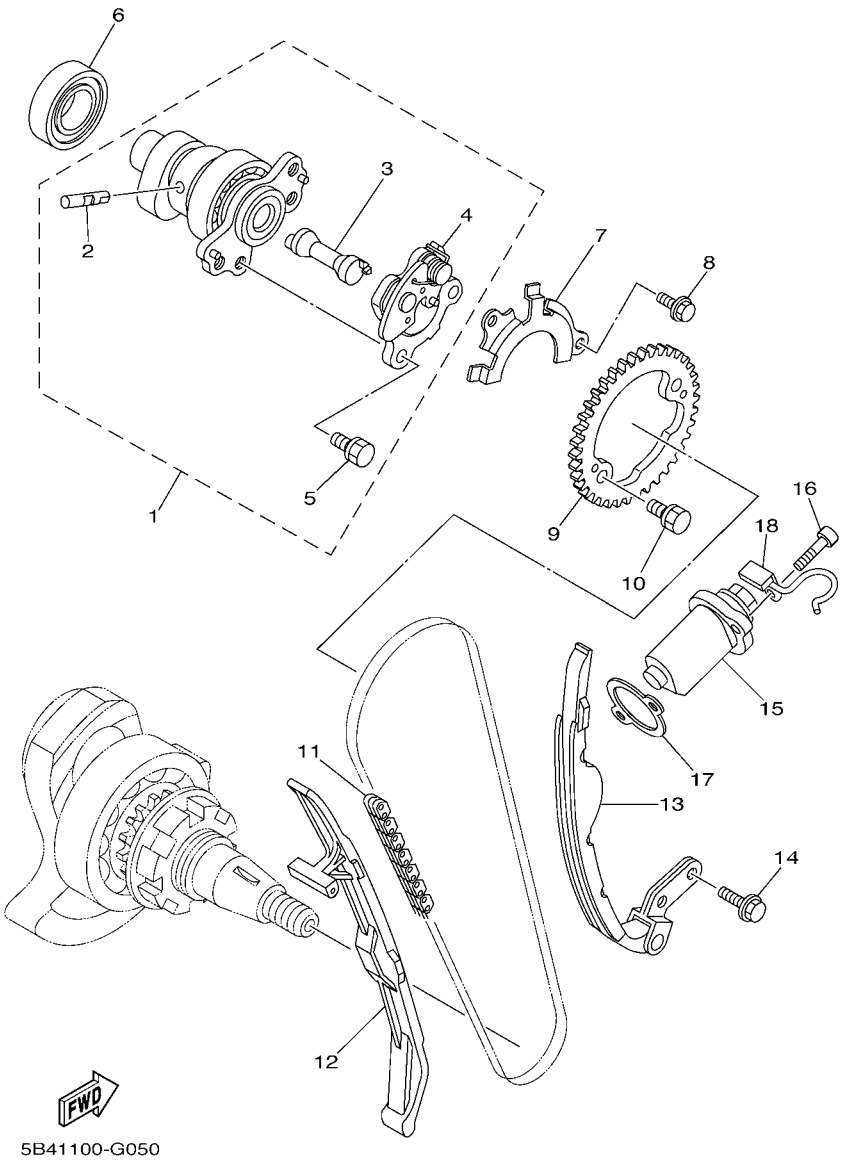

FIG. 5 CAMSHAFT & CHAIN

REF. NO.	PART NO.	DESCRIPTION	USA					REMARKS
1	5B4–12170–00	CAMSHAFT ASSY 1	1					
2	5VK–12284–00	.PIN, DECOMPRESSION LEVER	1					
3	1S3–12290–00	.LEVER, DECOMPRESSION SPRING	1					
4	1S3–12280–01	.DECOMPRESSION ASSY	1					
5	90105–07004	.BOLT, FLANGE	2					
6	93306–07209	BEARING	1					
7	5VK–1111F–00	PLATE	1					
8	90105–06078	BOLT, FLANGE	2					
9	1S3–12176–00	SPROCKET, CAM CHAIN	1					
10	90105–07004	BOLT, FLANGE	2					
11	94591–57126	CHAIN (98XRH2010-126M)	1					
12	3B4–12231–01	GUIDE, STOPPER 1	1					
13	3B4–12241–00	GUIDE, STOPPER 2	1					
14	90105–06082	BOLT, FLANGE	2					
15	3TB–12210–00	TENSIONER ASSY, CAM CHAIN	1					
16	91312–06025	BOLT	2					
17	4DW–12213–00	GASKET, TENSIONER CASE	1					
18	5B4–13898–00	HOLDER	1					

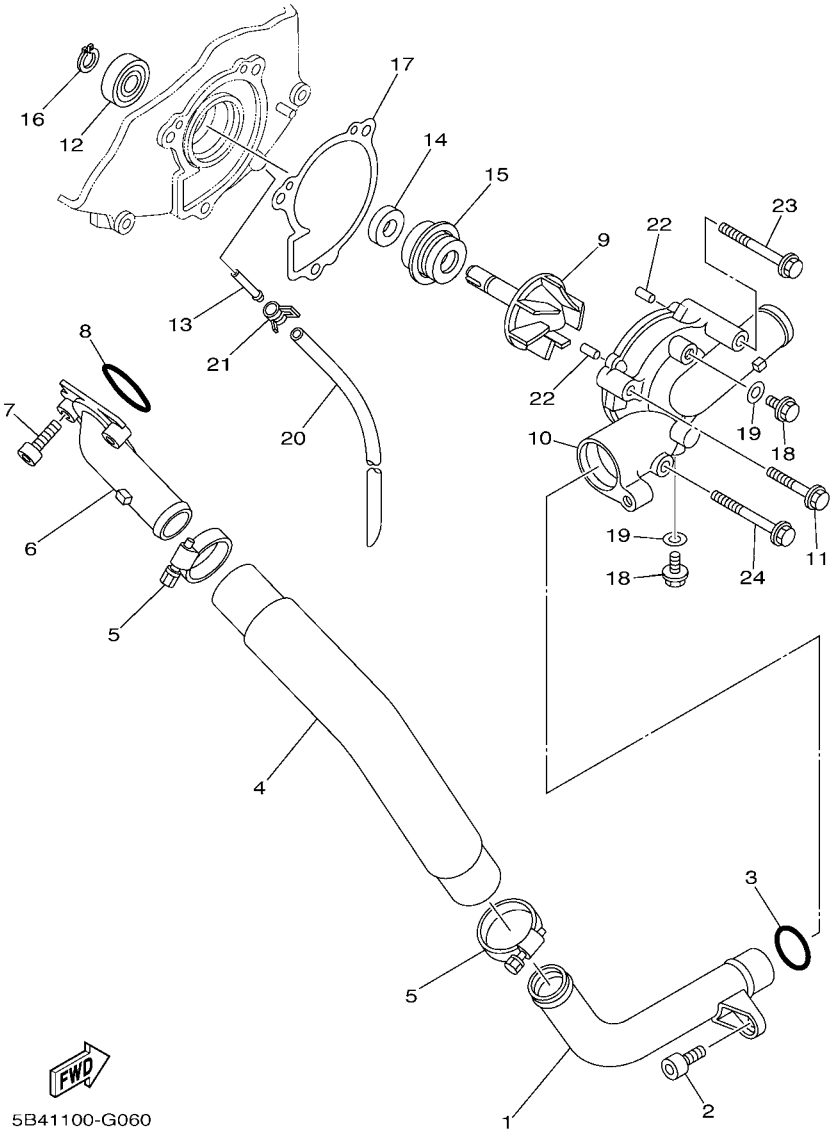

FIG. 6 WATER PUMP

REF. NO.	PART NO.	DESCRIPTION	USA					REMARKS
1	5B4–12481–00	PIPE 1	1					
2	91312–06012	BOLT	1					
3	93210–21190	O-RING	1					
4	5B4–12577–00	HOSE 2	1					
5	90450–32015	HOSE CLAMP ASSY	2					
6	5KM–12469–00	JOINT 1	1					
7	91312–06020	BOLT	2					
8	93210–33786	O-RING	1					
9	3B4–12450–00	IMPELLER SHAFT ASSY	1					
10	5B4–12422–00	COVER, HOUSING	1					
11	95022–06030	BOLT, FLANGE	1					
12	93306–00006	BEARING	1					
13	5D3–1243K–00	PIPE, DRAIN	1					
14	93101–10090	OIL SEAL	1					
15	11H–12438–10	SEAL, MECHANICAL	1					
16	99009–10400	CIRCLIP	1					
17	3B4–12428–00	GASKET, HOUSING COVER 2	1					
18	95022–06010	BOLT, FLANGE	2					
19	90430–06014	GASKET	2					
20	90445–07340	HOSE (L310)	1					
21	90467–07093	CLIP	1					
22	93604–10011	PIN, DOWEL	2					
23	95022–06050	BOLT, FLANGE	1					
24	95022–06050	BOLT, FLANGE	1					

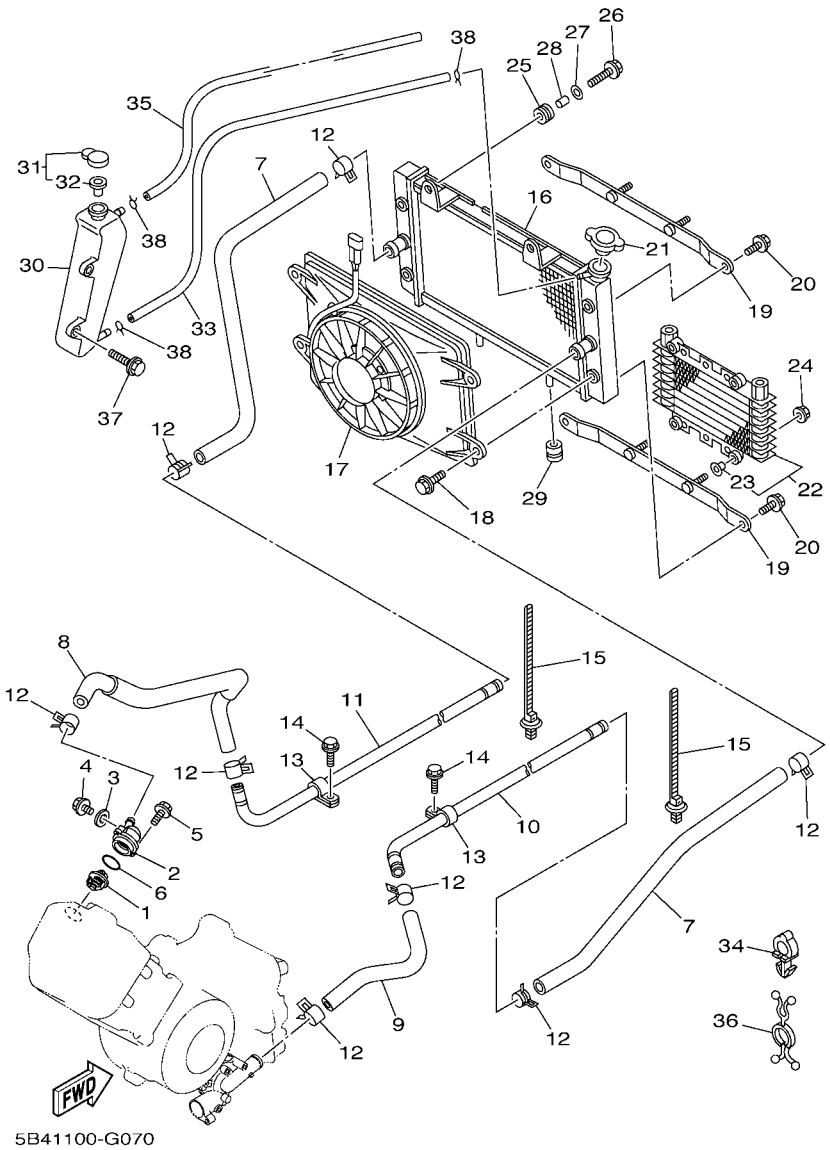

FIG. 7 RADIATOR & HOSE

REF. NO.	PART NO.	DESCRIPTION	USA					REMARKS
1	3B4–12411–00	THERMOSTAT	1					
2	5B4–12413–00	COVER, THERMOSTAT	1					
3	90430–06014	GASKET	1					
4	95022–06010	BOLT, FLANGE	1					
5	95022–06020	BOLT, FLANGE	2					
6	93210–41042	O-RING	1					
7	5UG–E2576–00	HOSE 1	2					
8	5B4–E2577–00	HOSE 2	1					
9	5B4–E2579–00	HOSE 4	1					
10	5B4–E2564–00	PIPE, WATER	1					
11	5B4–E2483–00	PIPE 3	1					
12	90467–26189	CLIP	8					
13	90461–12800	CLAMP	2					
14	90105–06833	BOLT, FLANGE	2					
15	90464–20005	CLAMP	2					
16	5B4–E2461–00	RADIATOR ASSY	1					
17	5B4–E2405–00	BLOWER ASSY	1					
18	5B4–E2675–00	BOLT, BLOWER HOLDING	4					
19	5B4–E244E–00	BRACKET 1	2					
20	5B4–E2623–00	BOLT	4					
21	5B4–E2462–00	CAP, RADIATOR	1					
22	5B4–E3470–00	OIL COOLER ASSY	1					
23	5B4–E2662–00	.COLLAR 1	4					
24	95702–06500	NUT, WITH WASHER	4					
25	90480–15363	GROMMET	2					
26	90105–06833	BOLT, FLANGE	2					
27	90201–06033	WASHER, PLATE	2					

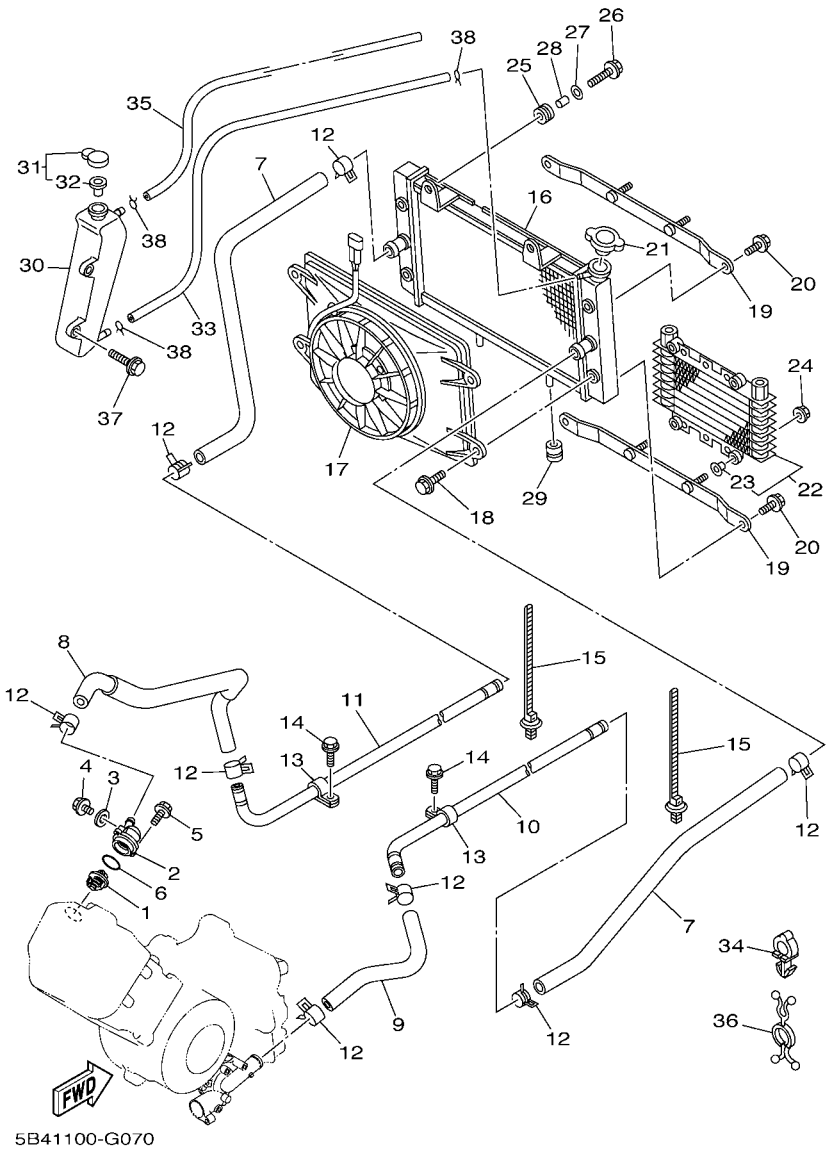

FIG. 7 RADIATOR & HOSE

REF. NO.	PART NO.	DESCRIPTION	USA					REMARKS
28	90387–06131	COLLAR	2					
29	90480–17800	GROMMET	2					
30	5B4–F1871–00	TANK, RECOVERY	1					
31	1AA–21815–00	CAP	1					
32	1AA–21874–00	.GASKET	1					
33	5B4–F247A–00	HOSE 1	1					
34	90464–10833	CLAMP	1					
35	5B4–F247B–00	HOSE 2	1					
36	90464–29179	CLAMP	2					
37	90119–06868	BOLT, WITH WASHER	2					
38	90467–08003	CLIP	3					

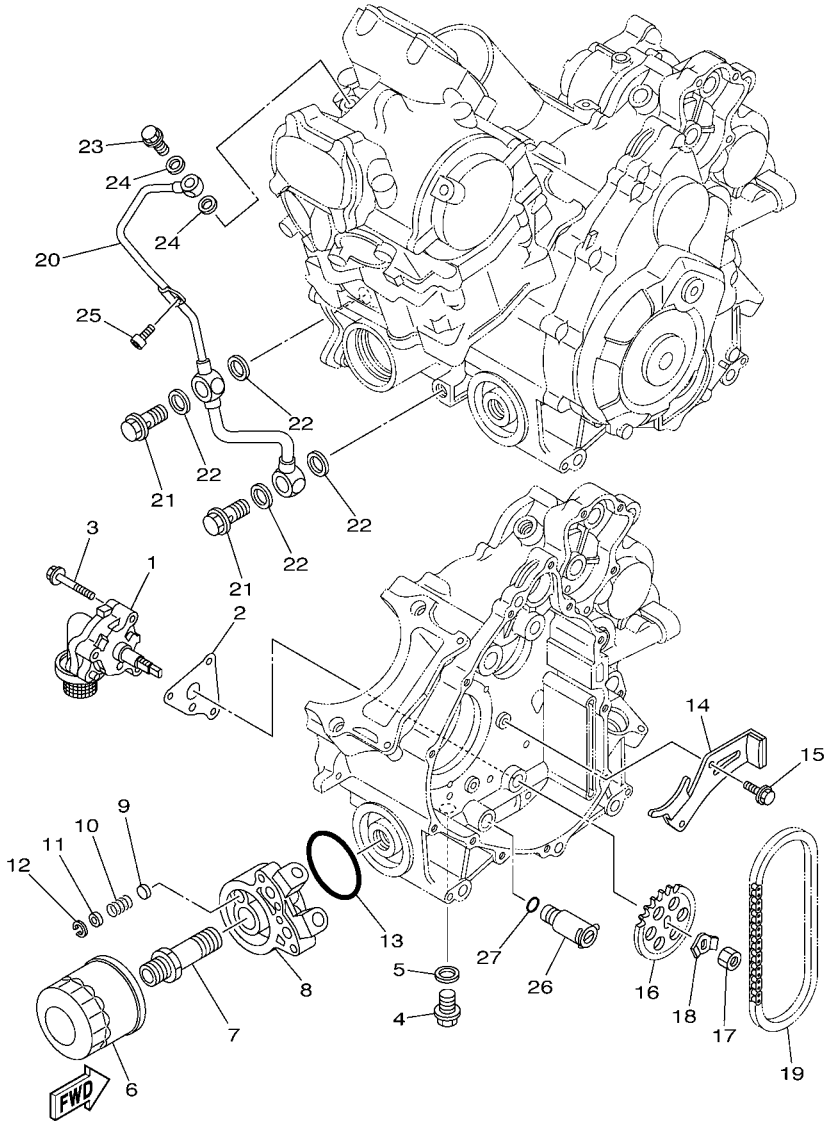

FIG. 8 OIL PUMP

REF. NO.	PART NO.	DESCRIPTION	USA					REMARKS
1	3B4–13300–00	OIL PUMP ASSY	1					
2	3B4–13329–00	GASKET, PUMP COVER	1					
3	95022–06040	BOLT, FLANGE	3					
4	90340–14132	PLUG, STRAIGHT SCREW	1					
5	214–11198–01	GASKET	1					
6	5GH–13440–20	ELEMENT ASSY, OIL CLEANER	1					
7	90401–20162	BOLT, UNION	1					
8	5UG–13461–00	PLATE, ADAPTOR	1					
9	1YW–13497–00	PLUG	1					
10	90501–082E3	SPRING, COMPRESSION	1					
11	92902–06600	WASHER, PLATE	1					
12	93420–13073	CIRCLIP	1					
13	93210–57428	O-RING	1					
14	3B4–12221–00	GUIDE, STOPPER 3	1					
15	90105–06082	BOLT, FLANGE	2					
16	3B4–13355–00	SPROCKET, DRIVEN	1					
17	95312–10600	NUT	1					
18	90215–10008	WASHER, LOCK	1					
19	94580–31074	CHAIN (DID 25HT)	1					
20	3B4–13171–00	PIPE, DELIVERY 2	1					
21	90401–14118	BOLT, UNION	2					
22	90430–14043	GASKET	4					
23	90401–10015	BOLT, UNION	1					
24	90430–10188	GASKET	2					
25	91312–06012	BOLT	1					
26	25G–13490–00	RELIEF VALVE ASSY	1					
27	93210–10096	O-RING	1					

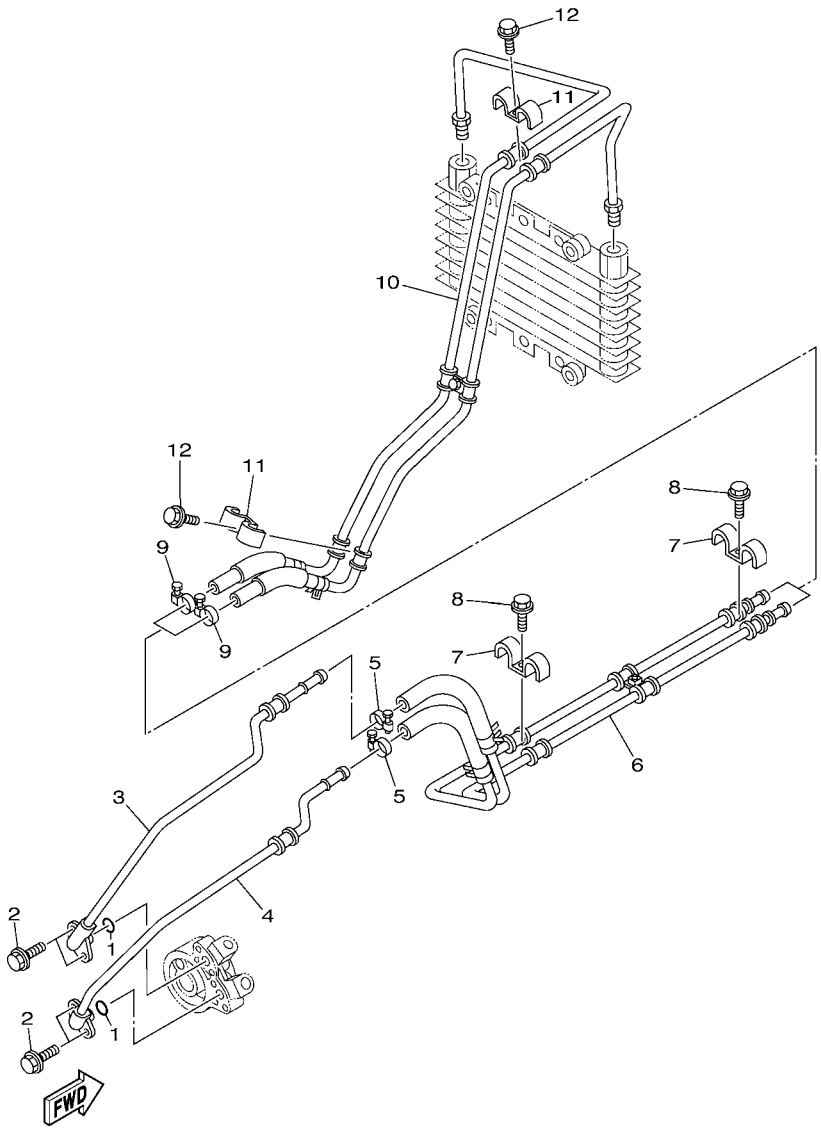

5B41100-G090

FIG. 9 OIL PIPE

REF. NO.	PART NO.	DESCRIPTION	USA					REMARKS
1	93210–10197	O-RING	2					
2	91312–06016	BOLT	4					
3	5B4–13416–00	PIPE, OIL 1	1					
4	5B4–13418–00	PIPE, OIL 2	1					
5	90450–22017	HOSE CLAMP ASSY	2					
6	5B4–E3406–00	OIL PIPE COMP. 2	1					
7	90462–15800	CLAMP	2					
8	90105–06832	BOLT, FLANGE	2					
9	90450–22017	HOSE CLAMP ASSY	2					
10	5B4–E3405–00	OIL PIPE COMP. 1	1					
11	90462–15800	CLAMP	2					
12	90105–06832	BOLT, FLANGE	2					

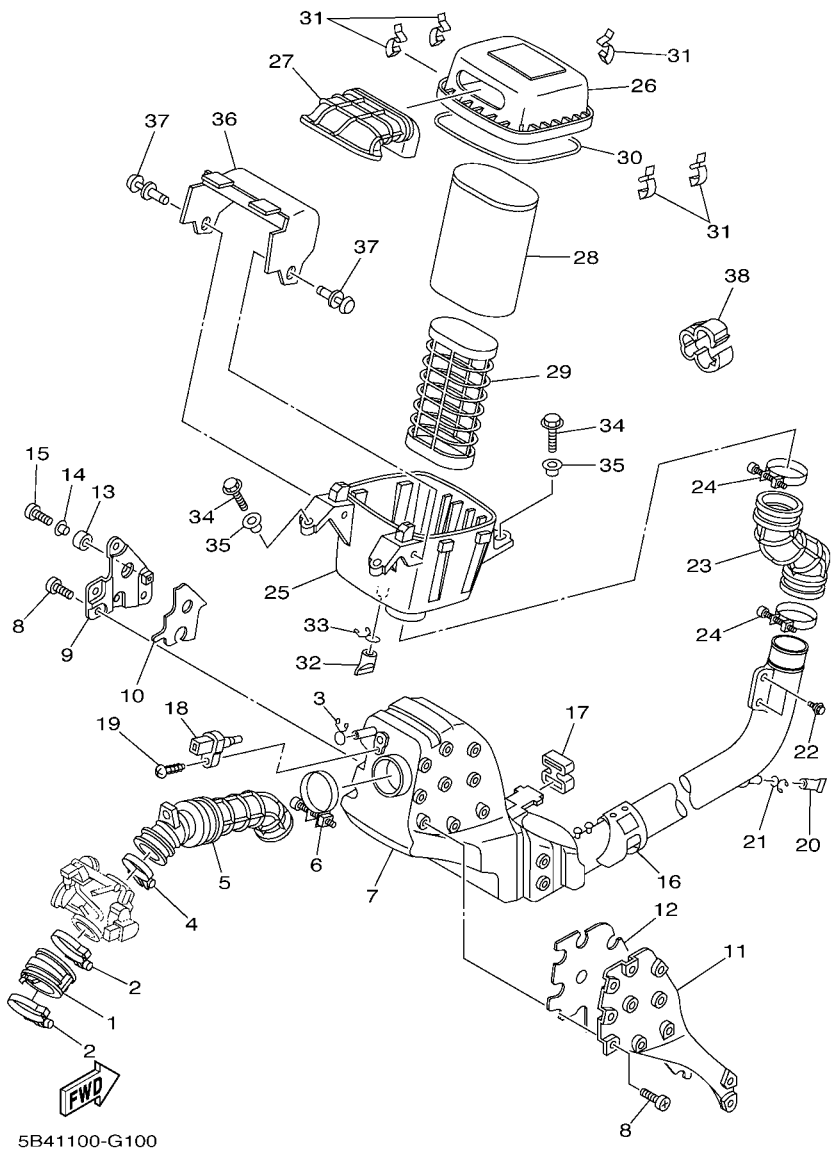

FIG. 10 INTAKE

REF. NO.	PART NO.	DESCRIPTION	USA					REMARKS
1	5B4–13586–00	JOINT, CARBURETOR 1	1					
2	90450–72004	HOSE CLAMP ASSY	2					
3	90467–15012	CLIP	1					
4	90450–59009	HOSE CLAMP ASSY	1					
5	5B4–E4453–00	JOINT, AIR CLEANER 1	1					
6	5B4–E4455–00	BAND	1					
7	5B4–E443A–00	DUCT	1					
8	5B4–E4325–00	SCREW, PAN HEAD	16					
9	5B4–E4247–00	PLATE 1	1					
10	5B4–E4163–00	SPACER	1					
11	5B4–E4248–00	PLATE 2	1					
12	5B4–E4442–00	SPACER	1					
13	5B4–E4426–00	DAMPER 2	1					
14	5B4–E4449–00	COLLAR	1					
15	5B4–E4429–00	SCREW	1					
16	5B4–E442F–00	PROTECTOR	1					
17	5B4–E4409–00	DAMPER	1					
18	8FP–85886–00	SENSOR, AIR TEMPERATURE	1					
19	97702–50520	SCREW, TAPPING	1					
20	5BF–1443E–00	PIPE, DRAIN	1					
21	90467–160A4	CLIP	1					
22	90109–06172	BOLT	4					
23	5B4–E4454–00	JOINT	1					
24	5B4–E4455–00	BAND	2					
25	5B4–E4411–00	CASE, AIR CLEANER 1	1					
26	5B4–E4412–00	CAP, CLEANER CASE 1	1					
27	5B4–E4437–00	DUCT	1					

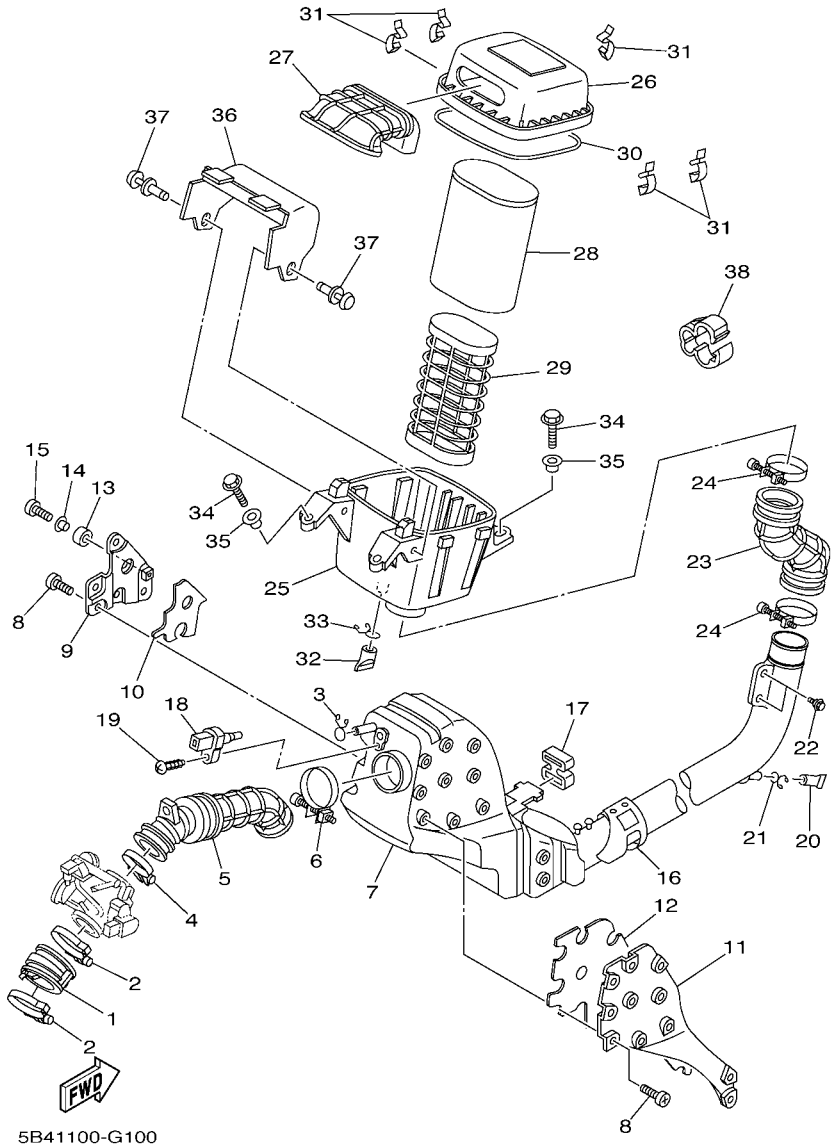

FIG. 10 INTAKE

REF. NO.	PART NO.	DESCRIPTION	USA					REMARKS
28	5B4–E4451–00	ELEMENT, AIR CLEANER	1					
29	5B4–E4472–00	PLATE, ELEMENT	1					
30	5B4–E4457–00	SEAL	1					
31	3B4–14424–00	CLIP, CAP FITTING	5					
32	59V–14457–00	SEAL	1					
33	90467–220A1	CLIP	1					
34	90105–06833	BOLT, FLANGE	4					
35	90387–08023	COLLAR	4					
36	5B4–E246E–00	COVER 2	1					
37	5UG–F3483–00	RIVET	2					
38	90464–10233	CLAMP	2					

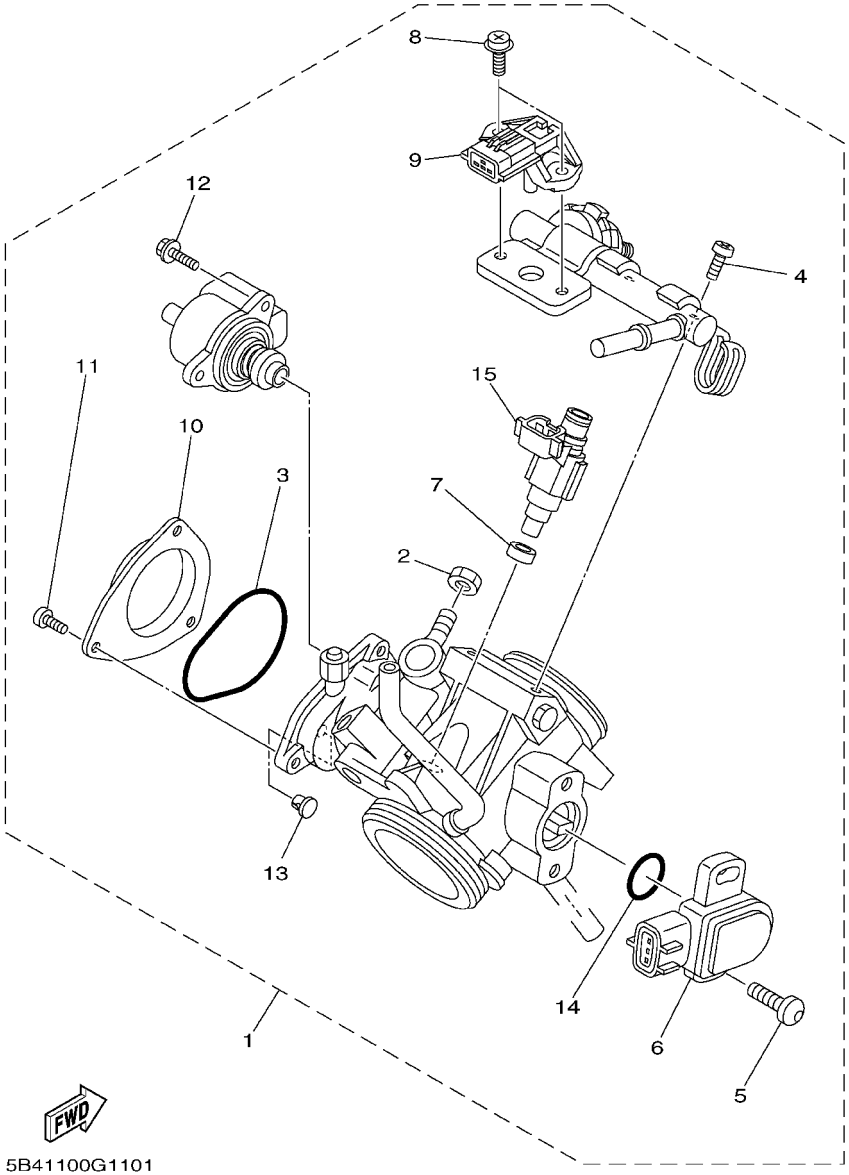

FIG. 11 THROTTLE BODY ASSY 1

REF. NO.	PART NO.	DESCRIPTION	USA					REMARKS
1	5B4–13750–00	THROTTLE BODY ASSY	1					
2	1S3–14161–00	.NUT, CABLE ADJUSTING	1					
3	5LP–14147–00	.O-RING	1					
4	92507–06012	.SCREW, PAN HEAD	2					
5	8CC–14216–10	.SCREW	2					
6	3B4–85885–00	.THROTTLE SENSOR ASSY	1					
7	8FP–13556–00	.GASKET, MANIFOLD	1					
8	92507–06010	.SCREW, PAN HEAD	2					
9	2C0–82380–10	.SENSOR, PRESSURE	1					
10	5UG–14293–00	.COVER 1	1					
11	98507–04006	.SCREW, PAN HEAD	3					
12	1S4–14216–00	.SCREW	3					
13	1UY–14155–00	.GUIDE, CABLE	1					
14	5YP–14562–00	.O-RING	1					
15	5B4–13761–00	.INJECTOR ASSY	1					

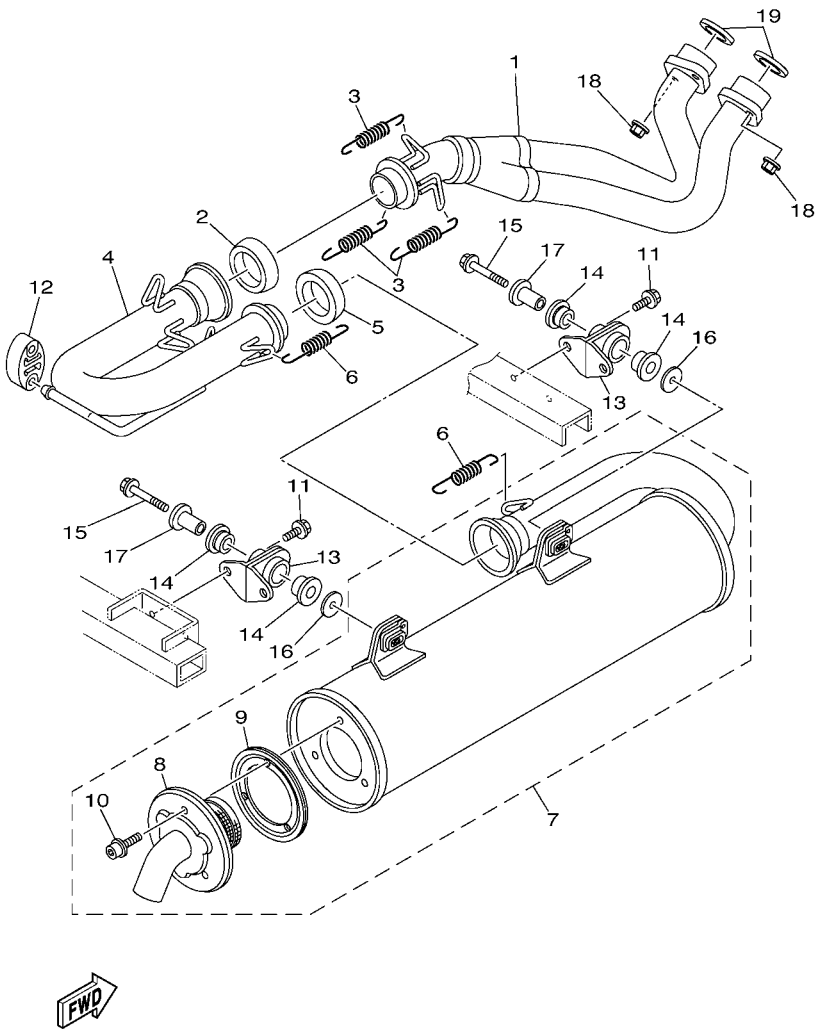

5B41100-G120

FIG. 12 EXHAUST

REF. NO.	PART NO.	DESCRIPTION	USA					REMARKS
1	5B4–E4611–00	PIPE, EXHAUST 1	1					
2	3B4–14714–00	GASKET, MUFFLER	1					
3	90506–26010	SPRING, TENSION	3					
4	5B4–E4621–00	PIPE, EXHAUST 2	1					
5	3B4–14714–00	GASKET, MUFFLER	1					
6	90506–26010	SPRING, TENSION	2					
7	5B4–E4710–00	MUFFLER ASSY 1	1					
8	5B4–E4752–00	.PIPE, OUTLET	1					
9	5B4–E4755–00	.GASKET, SILENCER	1					
10	5B4–E4719–00	.BOLT, MUFFLER	3					
11	95812–08014	BOLT, FLANGE	4					
12	5UG–14737–00	DAMPER, MUFFLER	1					
13	5B4–F1440–00	MUFF. STAY SUB-KUMI	2					
14	5VY–27424–00	DAMPER, FOOTREST 2	4					
15	95802–08045	BOLT, FLANGE	2					
16	90201–08034	WASHER, PLATE	2					
17	90387–08039	COLLAR	2					
18	95702–08500	NUT, WITH WASHER	4					
19	3YF–14613–01	GASKET, EXHAUST PIPE	2					

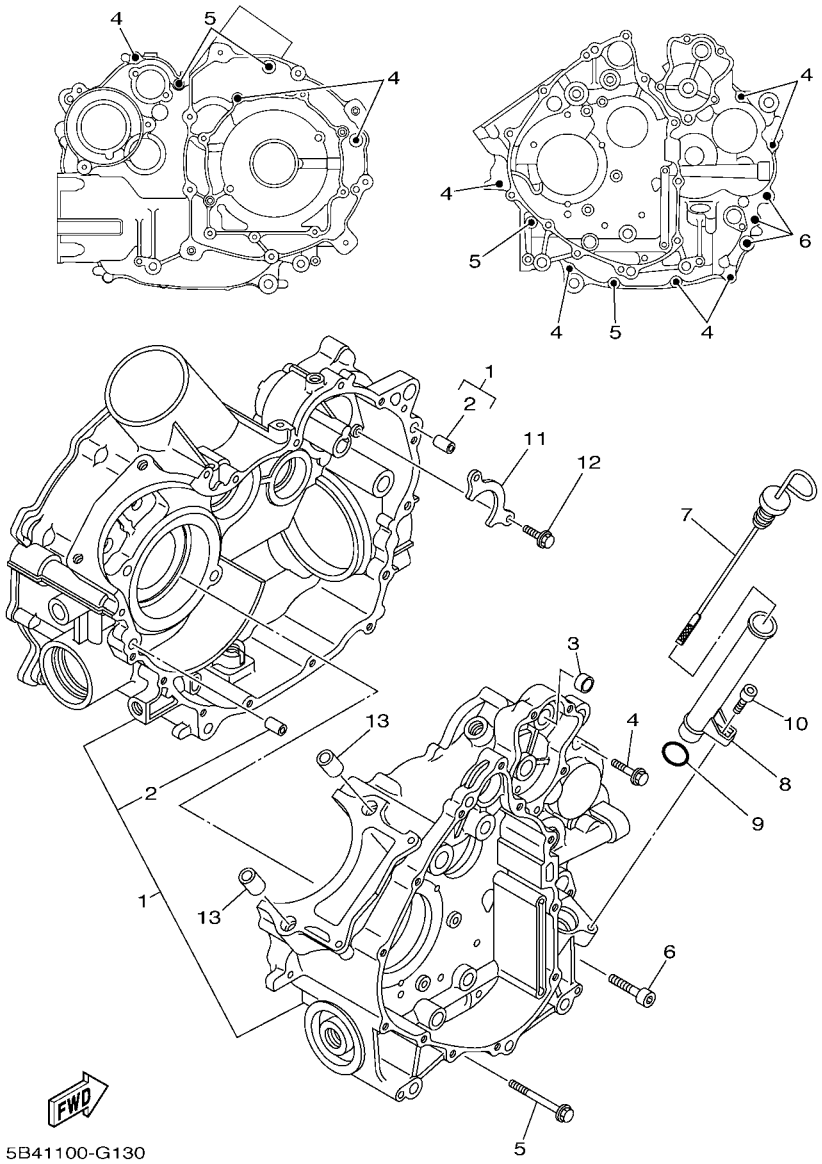

FIG. 13 CRANKCASE

REF. NO.	PART NO.	DESCRIPTION	USA					REMARKS
1	3B4–15100–23	CRANKCASE ASSY	1					
2	99530–10116	.PIN, DOWEL	2					
3	3B4–18581–00	SPACER, CAM SHAFT	1					
4	95022–06030	BOLT, FLANGE	9					
5	95022–06060	BOLT, FLANGE	4					
6	91312–08040	BOLT	3					
7	5B4–15362–00	PLUG, OIL LEVEL	1					
8	5B4–15112–00	PIPE, OIL	1					
9	93210–21631	O-RING	1					
10	91312–06012	BOLT	1					
11	3B4–15388–00	PLATE, BEARING COVER	1					
12	90105–06082	BOLT, FLANGE	2					
13	99530–14016	PIN, DOWEL	2					

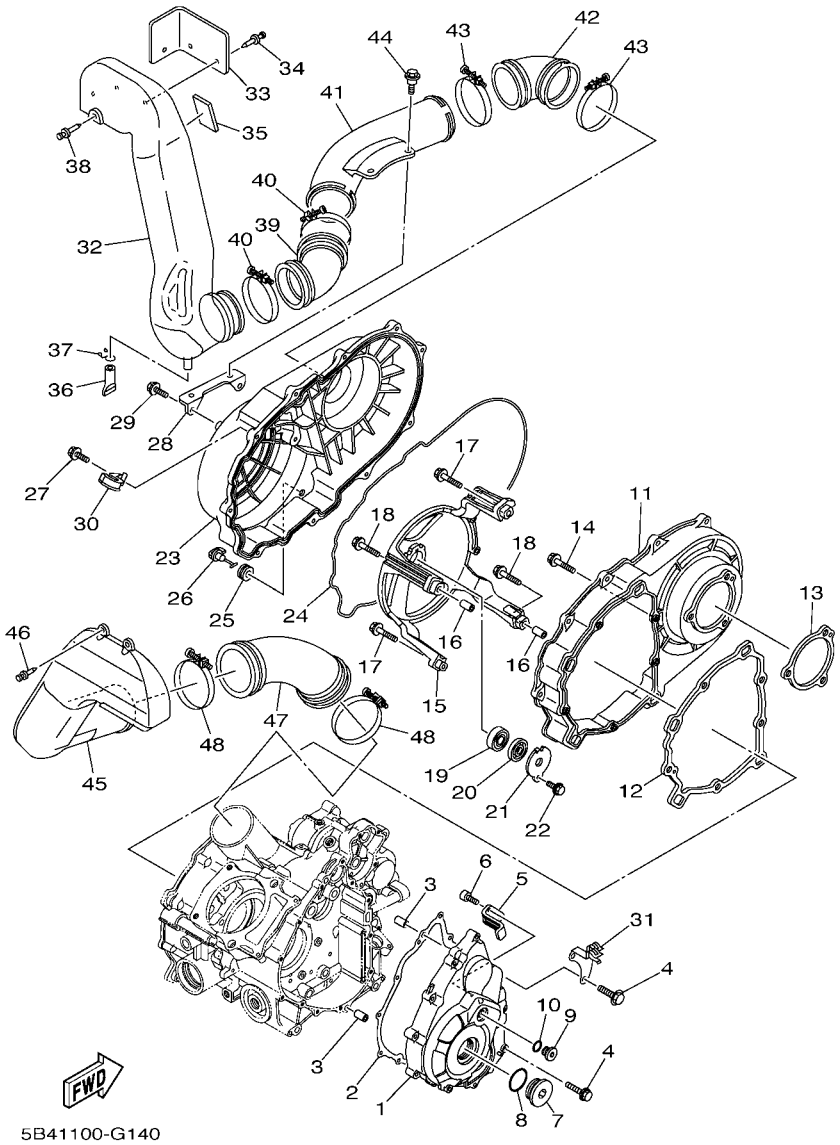

FIG. 14 CRANKCASE COVER 1

REF. NO.	PART NO.	DESCRIPTION	USA					REMARKS
1	3B4–15411–00	COVER, CRANKCASE 1	1					
2	3B4–15451–00	GASKET, CRANKCASE COVER 1	1					
3	99530–10116	PIN, DOWEL	2					
4	95022–06030	BOLT, FLANGE	11					
5	3B4–15113–00	PLATE	1					
6	90110–05031	BOLT, HEXAGON SOCKET HEAD	2					
7	90340–36002	PLUG, STRAIGHT SCREW	1					
8	93210–357A3	O-RING	1					
9	90340–14011	PLUG, STRAIGHT SCREW	1					
10	93210–14369	O-RING	1					
11	5B4–15421–00	COVER, CRANKCASE 2	1					
12	3B4–15453–00	GASKET	1					
13	3B4–15315–00	SEAL, CRANKCASE	1					
14	95822–06030	BOLT, FLANGE	8					
15	3B4–15442–00	HOUSING, BEARING	1					
16	99530–10116	PIN, DOWEL	2					
17	95822–06030	BOLT, FLANGE	2					
18	95822–06040	BOLT, FLANGE	2					
19	93306–20120	BEARING	1					
20	93101–12168	OIL SEAL	1					
21	4WV–15381–00	PLATE, BEARING COVER	1					
22	95022–06016	BOLT, FLANGE	1					
23	5B4–15431–00	COVER, CRANKCASE 3	1					
24	3B4–15379–00	SEAL, CRANKCASE	1					
25	90480–13018	GROMMET	1					
26	5KM–15351–00	PLUG, DRAIN	1					
27	95822–06020	BOLT, FLANGE	12					

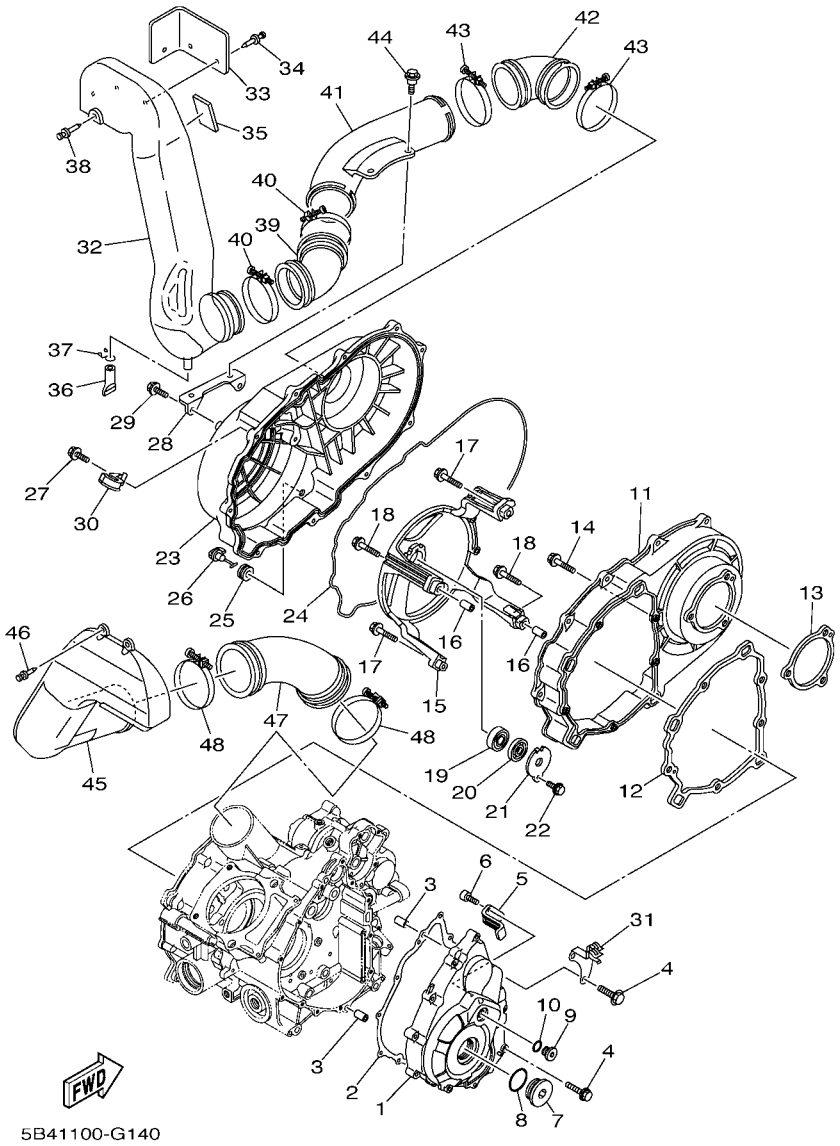

FIG. 14 CRANKCASE COVER 1

REF. NO.	PART NO.	DESCRIPTION	USA					REMARKS
28	2P5–15199–00	BRACKET	1					
29	95822–06012	BOLT, FLANGE	2					
30	90462–10049	CLAMP	1					
31	5B4–13487–00	GUIDE, OIL HOSE	1					
32	5B4–E5471–00	DUCT, AIR	1					
33	5B4–E5499–00	PROTECTOR, COVER	1					
34	90269–06800	RIVET	3					
35	5B4–F3421–00	PLATE, DAMPER 1	1					
36	5BF–1443E–00	PIPE, DRAIN	1					
37	90467–16195	CLIP	1					
38	90269–06800	RIVET	1					
39	5B4–E5474–00	SEAL, AIR DUCT	1					
40	90460–85135	CLAMP, HOSE	2					
41	5B4–E5475–00	DUCT, AIR	1					
42	5B4–E5379–00	SEAL, CRANKCASE	1					
43	90460–85135	CLAMP, HOSE	2					
44	90109–06172	BOLT	2					
45	5B4–E5470–00	AIR DUCT ASSY	1					
46	90269–08813	RIVET	2					
47	5B4–E5472–00	SEAL, AIR DUCT	1					
48	90460–85135	CLAMP, HOSE	2					

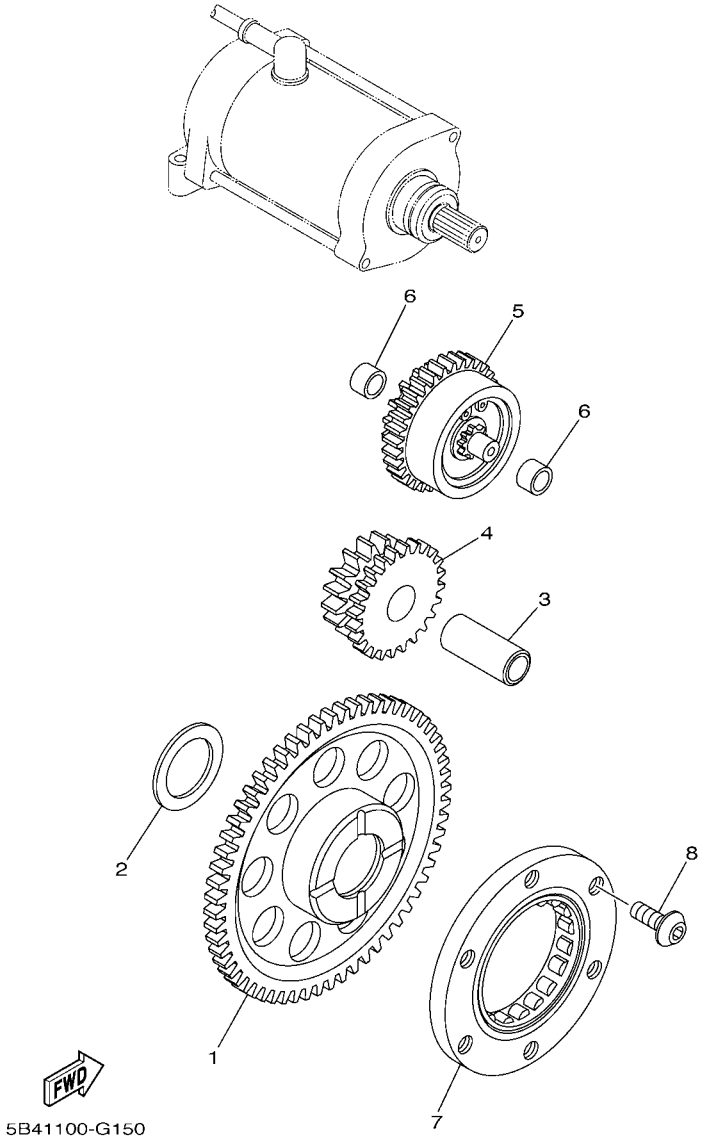

FIG. 15 STARTER CLUTCH

REF. NO.	PART NO.	DESCRIPTION	USA					REMARKS
1	3B4–15515–00	GEAR 3 (49T)	1					
2	90201–286K9	WASHER, PLATE (T1.0)	1					
3	3B4–15522–00	SHAFT 2	1					
4	3B4–15517–00	GEAR, IDLER 2 (25T/15T)	1					
5	1S3–15560–00	DAMPER ASSY	1					
6	90380–10002	BUSH, SOLID	2					
7	5KM–15590–00	STARTER ONE-WAY ASSY	1					
8	90149–08018	SCREW	3					

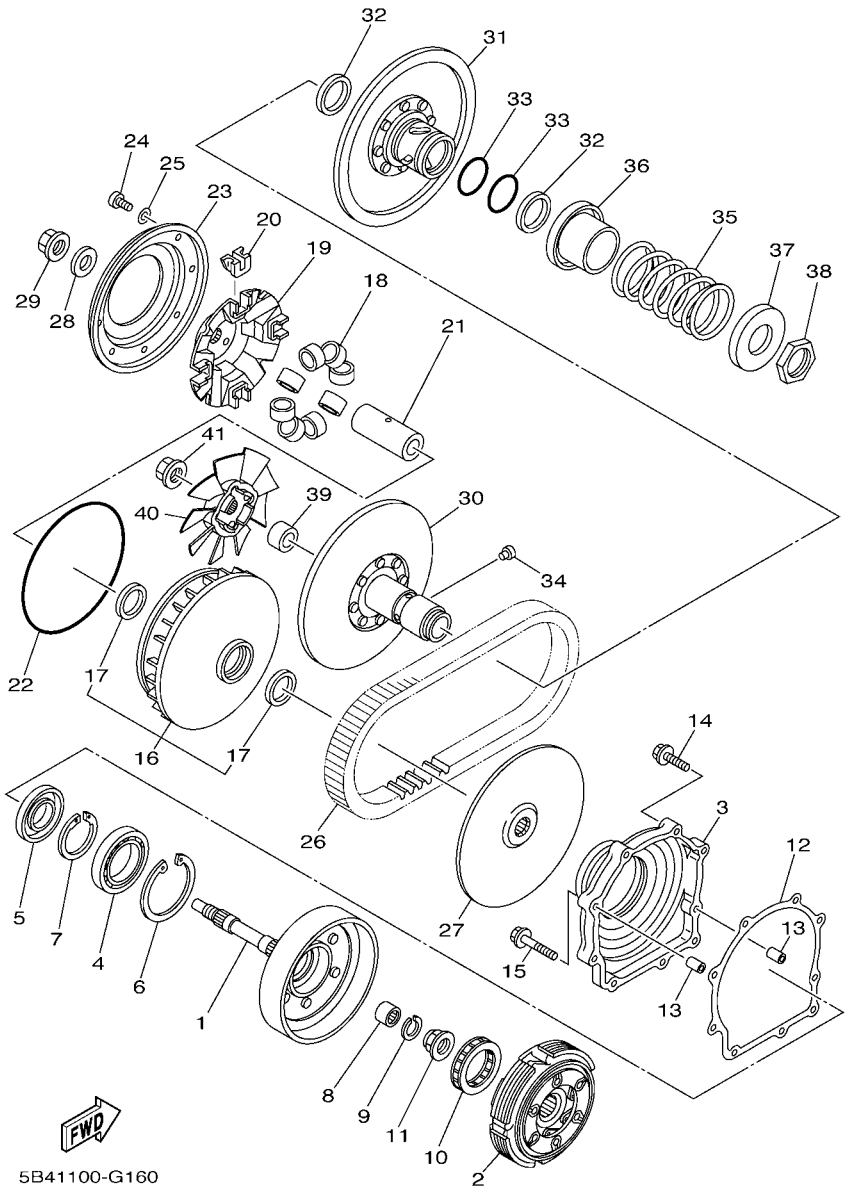

FIG. 16 CLUTCH

REF. NO.	PART NO.	DESCRIPTION	USA					REMARKS
1	16B–16611–00	CLUTCH HOUSING COMP.	1					
2	3B4–16620–00	CLUTCH CARRIER ASSY	1					
3	3B4–15163–00	HOUSING, BEARING 1	1					
4	93316–01003	BEARING	1					
5	93102–35004	OIL SEAL	1					
6	99009–80500	CIRCLIP	1					
7	93410–46079	CIRCLIP	1					
8	93315–21813	BEARING	1					
9	93450–24062	CIRCLIP	1					
10	4SH–16664–00	BEARING, ONE WAY	1					
11	90179–22021	NUT	1					
12	3B4–15463–00	GASKET, COVER PINION 2	1					
13	99530–10116	PIN, DOWEL	2					
14	95022–06030	BOLT, FLANGE	7					
15	95022–06040	BOLT, FLANGE	2					
16	5B4–17606–00	PRIMARY SLIDING SHEAVE COMP.	1					
17	93101–35001	.OIL SEAL	2					
18	5B4–17632–00	WEIGHT	8					
19	3B4–17623–00	CAM	1					
20	3B4–17653–00	SLIDER	4					
21	3B4–17645–00	COLLAR	1					
22	93211–594A4	O-RING	1					
23	4WV–17639–10	STOPPER	1					
24	90157–04006	SCREW, PAN HEAD	8					
25	90201–047R9	WASHER, PLATE	8					
26	5B4–17641–00	V-BELT	1					
27	5B4–17611–00	SHEAVE, PRIMARY FIXED	1					

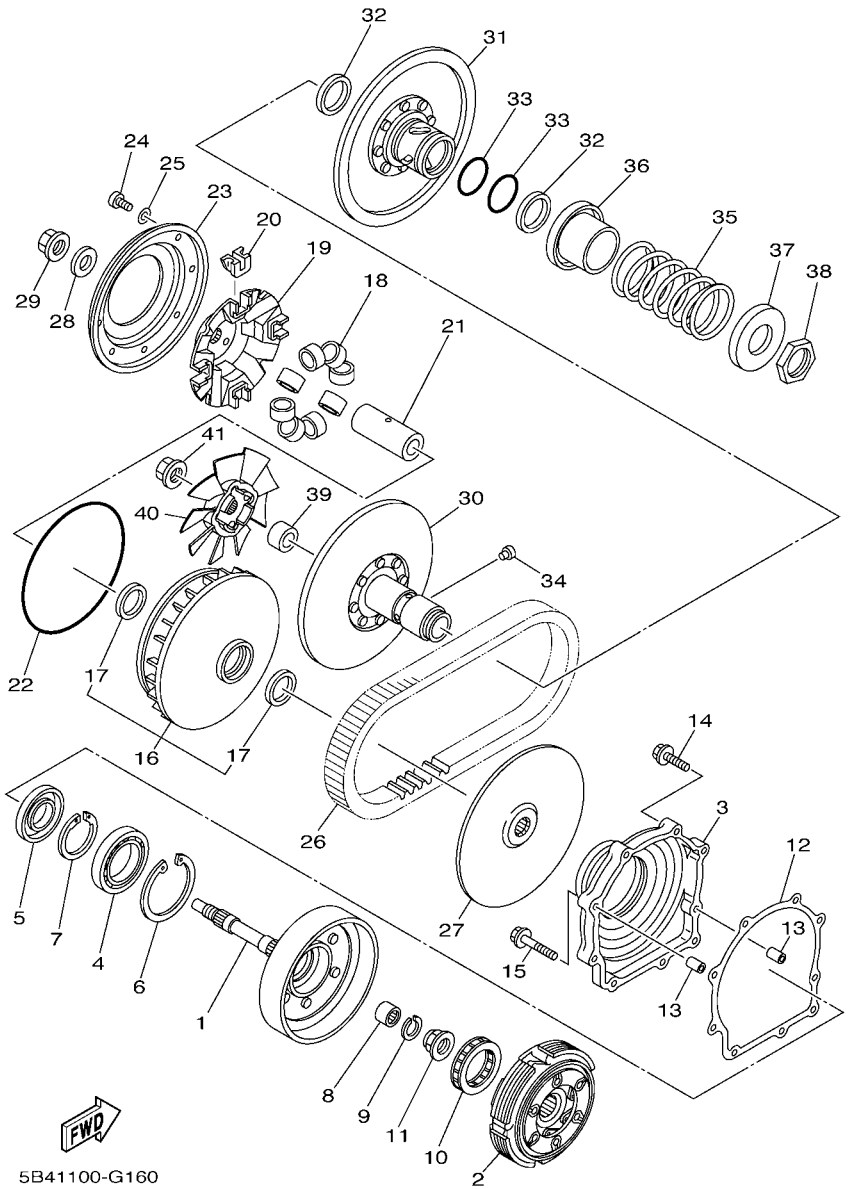

FIG. 16 CLUTCH

REF. NO.	PART NO.	DESCRIPTION	USA					REMARKS
28	90201–190T7	WASHER, PLATE	1					
29	90179–16005	NUT	1					
30	3B4–17660–00	SECONDARY FIXED SHEAVE COMP.	1					
31	3B4–17670–00	SECONDARY SLIDING SHEAVE	1					
32	93104–41119	OIL SEAL	2					
33	93210–44545	O-RING	2					
34	4CW–17664–00	PIN, GUIDE	4					
35	90501–650A0	SPRING, COMPRESSION	1					
36	4WV–17684–00	SEAT, SECONDARY SPRING	1					
37	4WV–17644–00	SEAT,SPRING	1					
38	90170–36279	NUT	1					
39	2P5–17649–00	SPACER	1					
40	5B4–17679–00	FAN	1					
41	90179–16005	NUT	1					

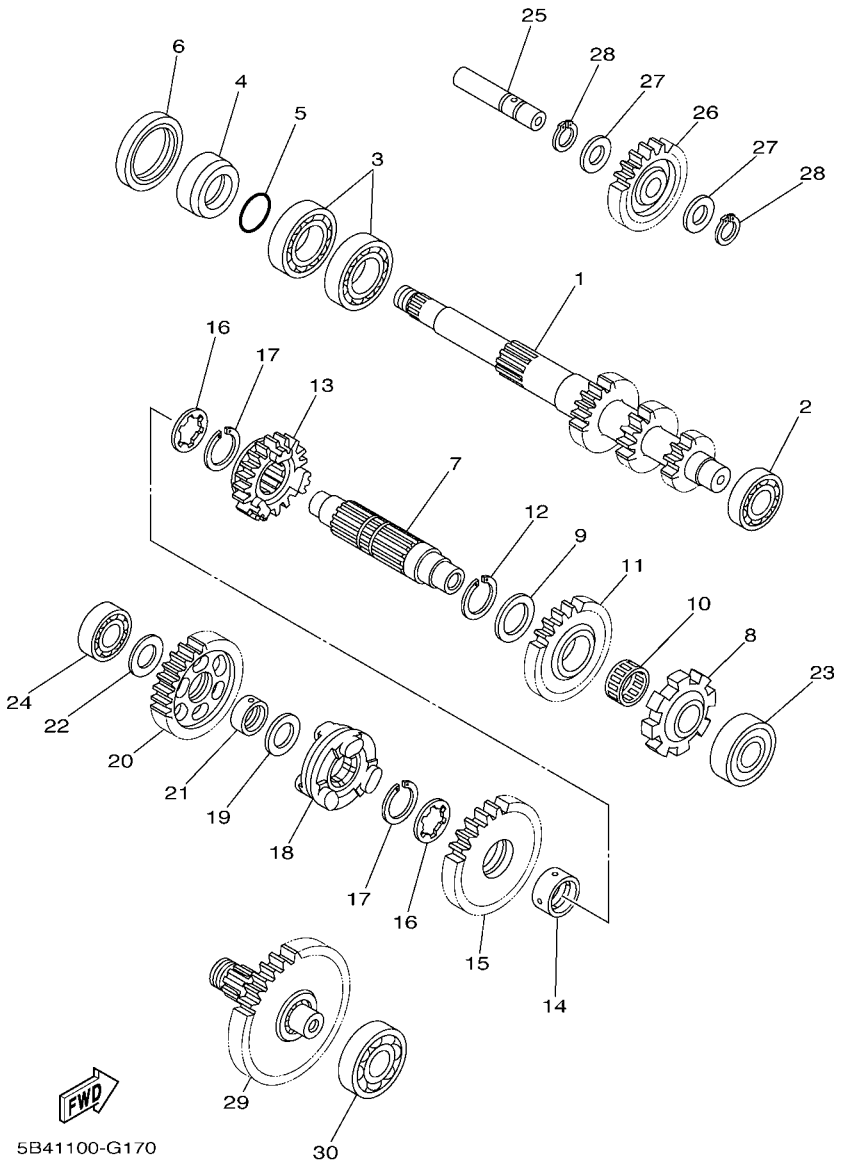

FIG. 17 TRANSMISSION

REF. NO.	PART NO.	DESCRIPTION	USA					REMARKS
1	5B4–17681–00	SHAFT, SECONDARY	1					
2	93306–00426	BEARING	1					
3	93306–07801	BEARING	2					
4	90387–26001	COLLAR	1					
5	93210–26001	O-RING	1					
6	93102–42004	OIL SEAL	1					
7	3B4–17421–00	AXLE, DRIVE	1					
8	3B4–17473–00	STOPPER	1					
9	90201–25290	WASHER, PLATE	1					
10	93310–32590	BEARING	1					
11	3B4–17253–00	GEAR, REVERSE WHEEL 2 (28T)	1					
12	93440–25084	CIRCLIP	1					
13	3B4–17582–00	GEAR, MIDDLE DRIVE (21T)	1					
14	90387–250R3	COLLAR	1					
15	3B4–17233–00	GEAR, LOW WHEEL (31T)	1					
16	90214–22007	WASHER, CLAW	2					
17	93440–25084	CIRCLIP	2					
18	5B4–17285–00	CLUTCH, DOG	1					
19	90201–20028	WASHER, PLATE	1					
20	5B4–17223–00	GEAR, HIGH WHEEL (31T)	1					
21	90387–20021	COLLAR	1					
22	90201–170U8	WASHER, PLATE	1					
23	93306–20464	BEARING	1					
24	93306–20309	BEARING	1					
25	3B4–17432–00	AXLE, IDLE	1					
26	3B4–17243–00	GEAR, REVERSE WHEEL 1 (23T)	1					Go to P/N : PE0-MC-090024
27	90201–150U6	WASHER, PLATE	2					

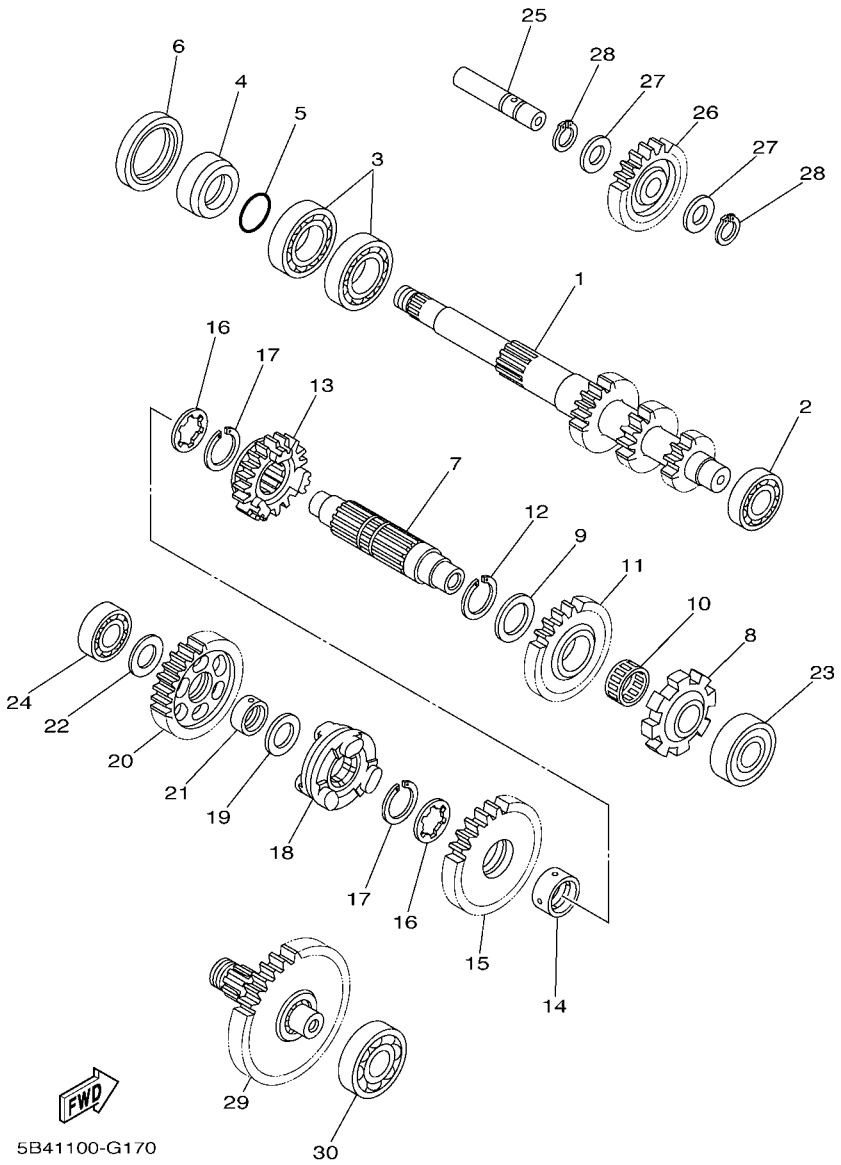

FIG. 17 TRANSMISSION

REF. NO.	PART NO.	DESCRIPTION	USA					REMARKS
28	93440–15012	CIRCLIP	2					
29	3B4–17520–00	DRIVE PINION ASSY (41T)	1					Go to P/N : PE0-MC-090024
30	93306–30438	BEARING	1					

PARTS NEWS

YAMAHA
YAMAHA MOTOR CO., LTD.
2500 SHINGAI IWATA SHIZUOKA JAPAN

News No. PE0-MC-090024 1/2

1 **Parts numbers correction Aug,31,2009**

Date: Apr./28/2009
Signature: M.Saito

Cause ☑ Revision Notice ☐ Correction ☐ Sales Unit Change ☐ Others

Model	See the"List of Models and CATALOGUE No's below."
Subject	PARTS CATALOGUE CORRECTIONS
CATALOGUE NO.	See the"List of Models and CATALOGUE No's below."

Time of YPEC Revision Text, Illustration --> May./20/2009 PDF Replace --> May./20/2009
(YPEC = Yamaha Parts Electrical Catalogue = Website parts catalogue)

FIG.17 TRANSMISSION SECTION

1. LIST CORRECTION

Ref.No.	OLD PART No.	NEW PART No.	PART NAME	Q'TY	INTERCHANGE ABILITY	REMARKS
25	3B4-17432-00	**3B4-17432-01**	AXLE, IDLE	1	○	
26	3B4-17243-00	**16B-17243-00**	GEAR, REVERSE WHEEL	1	○	**Note-1**
27	90201-150U6	**90201-15029**	WASHER, PLATE	2-->**1**	○	
28	1 ~~90344-15012~~ 93440-15012	**-----**	CIRCLIP	2	○	**Delete**
31	-----	**93310-31576**	BEARING	1	○	**Add.**
32	-----	**90387-15017**	COLLAR	1	○	**Add.**

* These changes are applied from initial production.
* The parts marked with ○-○ indicates interchangeability with a set.

Note-1; As for 3B4-17243-00, parts supply is discontinued.
Old Gear reverse wheel is not interchangeable with new Gear reverse wheel.
When you exchange old Gear reverse wheel , please exchange in Gear reverse wheel set (99999-03870).

**Components parts of Gear reverse wheel set : 99999-03870

Part No.	Part Name	Q'ty
3B4-17432-01	AXLE, IDEL	1
16B-17243-00	GEAR, REVERSE WHEEL	1
90201-15029	WASHER, PLATE	1
93310-31576	BEARING	1
90387-15017	COLLOR	1

2. ILLUSTRATION CORRECTION

OLD type

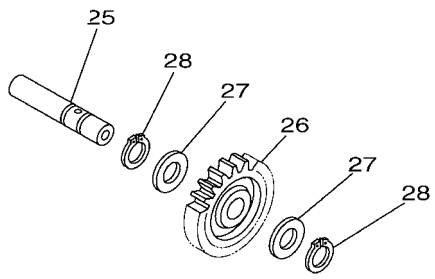

NEW type

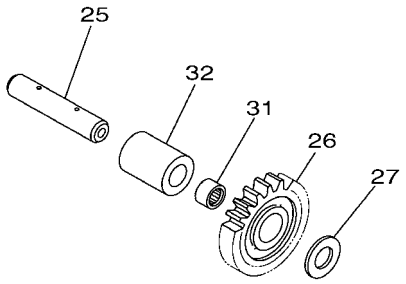

Thank you very much for your cooperation.

Parts Manager Check	Service Manager Check	Parts Manager File	YAMAHA MOTOR CO.,LTD 2500 Shingai Iwata Shizuoka 438-8501.Japan Technical Publication Dept.

YAMAHA GENUINE Parts & Accessories

PARTS NEWS

YAMAHA MOTOR CO., LTD.
2500 SHINGAI IWATA SHIZUOKA JAPAN

Date: Apr./28/2009

News No. PE0-MC-090024 2/2

Signature: M.Saito

Cause ☑ Revision Notice ☐ Correction ☐ Sales Unit Change ☐ Others

Model	See the"List of Models and CATALOGUE No's below."
Subject	PARTS CATALOGUE CORRECTIONS
CATALOGUE NO.	See the"List of Models and CATALOGUE No's below."

Time of YPEC Revision Text, Illustration --> May./20/2009 PDF Replace --> May./20/2009

(YPEC = Yamaha Parts Electrical Catalogue = Website parts catalogue)

3. LIST of Models and CATALOG No's

MODEL YEAR	MODEL NAME	MODEL CODE	CATALOG No.
2008	YXR70FX	5B41 / 5B42	1G5B4-100E1
2008	YXR70FX	5B43 / 5B44	1G5B4-300EA
2008	YXR70FX	5B45 / 5B46	1G5B4-100EA
2008	YXR70FX	5B47	1G5B4-300E1
2008	YXR70FX	5B48	1G5B4-110E1
2008	YXR70FX	5B49 / 5B4A	1G5B4-100EK
2008	YXR70FSPX	5B4B / 5B4C	1G5B4-100EV
2008	YXR70FSPX	5B4D	1G5B4-300EK
2008	YXR70FSP2X	5B4E / 5B4F / 5B4G	1G5B4-100EY
2009	YRX7FY	5B4H	1H5B4-110E1
2009	YRX70FY	5B4J / 5B4K / 5B4L	1H5B4-100E1
2009	YXR7FDUY	5B4M	1H5B4-110EA
2009	YXR70FDUY	5B4N	1H5B4-171E1
2009	YXR7FSP2Y	42S1	1H42S-110E1
2009	YXR70FSP2Y	42S2 / 42S3	1H42S-100E1

Thank you very much for your cooperation.

Parts Manager Check	Service Manager Check	Parts Manager File

YAMAHA MOTOR CO.,LTD
2500 Shingai Iwata Shizuoka 438-8501.Japan
Technical Publication Dept.

YAMAHA GENUINE Parts & Accessories

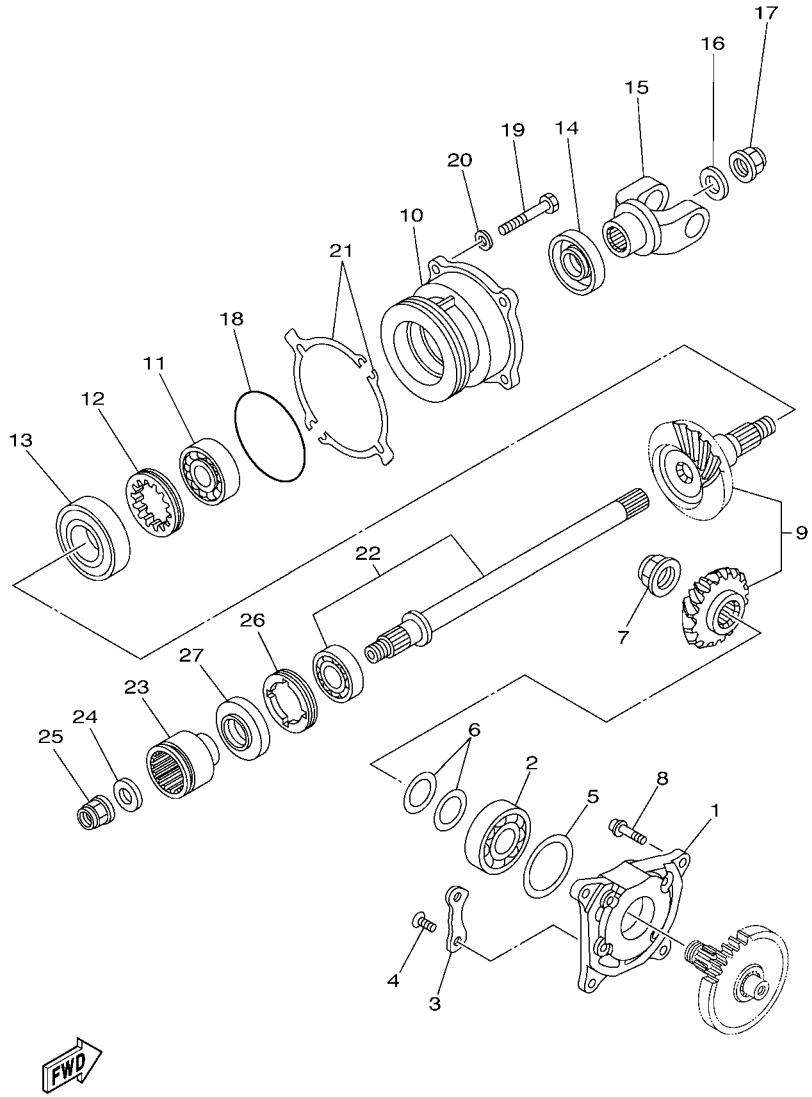

5B41100-G180

FIG. 18 MIDDLE DRIVE GEAR

REF. NO.	PART NO.	DESCRIPTION	USA					REMARKS
1	5B4–17521–00	HOUSING, BEARING	1					
2	93306–30537	BEARING	1					
3	11H–15383–02	PLATE, BEARING COVER	2					
4	90149–08013	SCREW	4					
5	90201–46M28	WASHER, PLATE	1					
6	5KM–17531–50	SHIM, PINION (0.5T)	2					UR
	5KM–17531–60	SHIM, PINION (0.55T)	2					UR
	5KM–17531–70	SHIM, PINION (0.6T)	2					UR
	5KM–17531–80	SHIM, PINION (0.7T)	2					UR
	5KM–17531–90	SHIM, PINION (0.8T)	2					UR
	5KM–17531–A0	SHIM, PINION (0.9T)	2					UR
	5KM–17531–B0	SHIM, PINION (1.0T)	2					UR
7	90179–22013	NUT	1					
8	90110–08091	BOLT, HEXAGON SOCKET HEAD	4					
9	5B4–17530–01	PINION SET	1					
10	3B4–17551–00	HOUSING, BEARING	1					
11	93306–37206	BEARING	1					
12	90179–60001	NUT	1					
13	93306–20654	BEARING	1					
14	93102–30010	OIL SEAL	1					
15	5B4–17556–00	YOKE, JOINT	1					
16	90201–16021	WASHER, PLATE	1					
17	90179–16006	NUT	1					
18	93210–78544	O-RING	1					
19	97022–08030	BOLT	4					
20	92902–08600	WASHER, PLATE	4					
21	3B4–17531–00	SHIM, PINION (0.1T)	2					UR

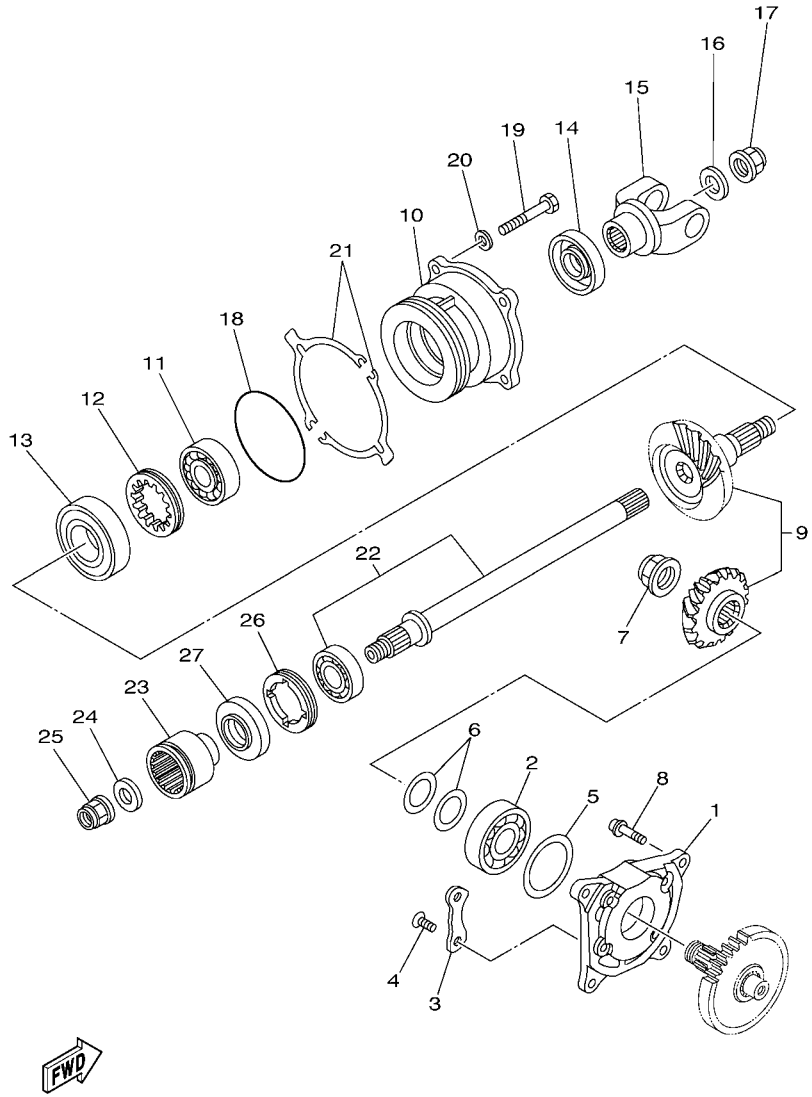

5B41100-G180

FIG. 18 MIDDLE DRIVE GEAR

REF. NO.	PART NO.	DESCRIPTION	USA					REMARKS
21	3B4–17531–10	SHIM, PINION (0.15T)	2					UR
	3B4–17531–20	SHIM, PINION (0.2T)	2					UR
	3B4–17531–30	SHIM, PINION (0.3T)	2					UR
	3B4–17531–40	SHIM, PINION (0.4T)	2					UR
	3B4–17531–50	SHIM, PINION (0.5T)	2					UR
	3B4–17531–60	SHIM, PINION (0.6T)	2					UR
22	5B4–1755A–00	MIDDLE DRIVEN SHAFT ASSY	1					
23	3B4–17832–00	COUPLING	1					
24	90201–16021	WASHER, PLATE	1					
25	90179–16006	NUT	1					
26	90179–55660	NUT	1					
27	93102–30010	OIL SEAL	1					

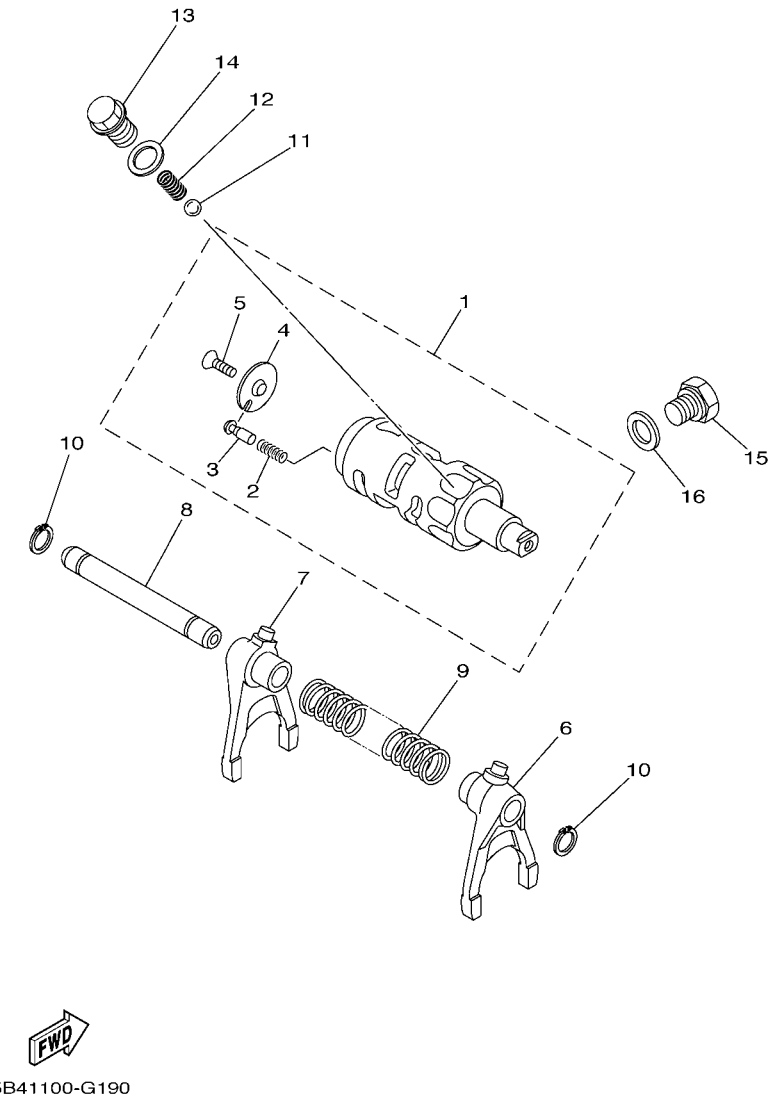

FIG. 19 SHIFT CAM & FORK

REF. NO.	PART NO.	DESCRIPTION	USA					REMARKS
1	5B4–18540–00	SHIFT CAM ASSY	1					
2	90501–06022	.SPRING, COMPRESSION	1					
3	5KM–18542–00	.POINT, NEUTRAL	1					
4	4UN–18566–00	.PLATE, SIDE 2	1					
5	90149–05016	.SCREW	1					
6	3B4–18511–00	FORK, SHIFT 1	1					
7	5B4–18512–00	FORK, SHIFT 2	1					
8	5B4–18531–00	BAR, SHIFT FORK GUIDE 1	1					
9	90501–140A2	SPRING, COMPRESSION	1					
10	99009–12400	CIRCLIP	2					
11	93503–08007	BALL	1					
12	90501–10353	SPRING, COMPRESSION	1					
13	90105–14003	BOLT, FLANGE	1					
14	90430–14194	GASKET	1					
15	90340–14036	PLUG, STRAIGHT SCREW	1					
16	90430–14194	GASKET	1					

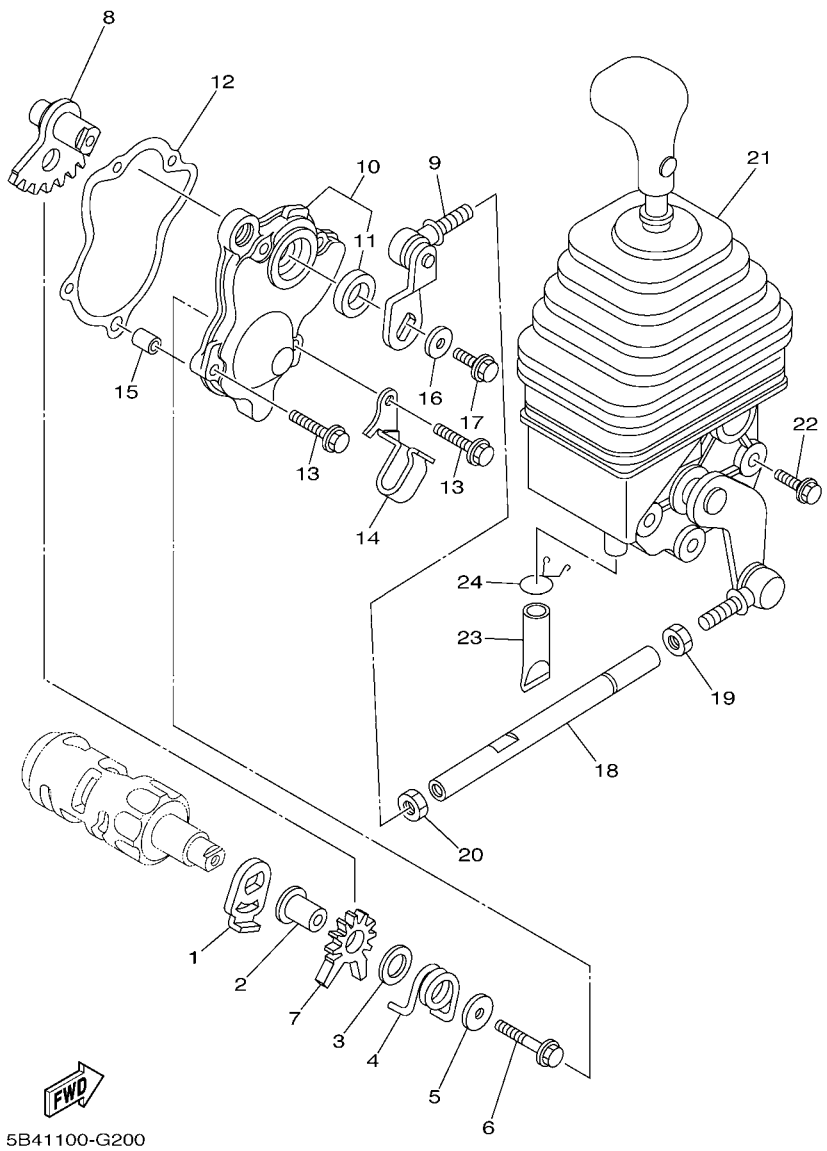

FIG. 20 SHIFT SHAFT

REF. NO.	PART NO.	DESCRIPTION	USA					REMARKS
1	4SH–18198–00	LEVER	1					
2	90387–0613B	COLLAR	1					
3	90201–132G5	WASHER, PLATE	1					
4	90508–35764	SPRING, TORSION	1					
5	90201–06036	WASHER, PLATE	1					
6	95812–06035	BOLT, FLANGE	1					
7	5KM–18191–00	LEVER	1					
8	3B4–18103–10	SHIFT SHAFT COMP.	1					
9	5B4–18104–00	SHIFT GUIDE COMP.	1					
10	3B4–18380–00	SHIFTER BRKT. ASSY	1					
11	93102–15212	.OIL SEAL	1					
12	3B4–18146–00	GASKET	1					
13	95022–06020	BOLT, FLANGE	4					
14	90462–10048	CLAMP	1					
15	99530–08012	PIN, DOWEL	1					
16	90201–06036	WASHER, PLATE	1					
17	90105–06176	BOLT, FLANGE	1					
18	5B4–18115–00	ROD, SHIFT	1					
19	90170–08358	NUT	1					
20	95302–08700	NUT	1					
21	5UG–18300–10	SHIFTER ASSY	1					
22	95802–08012	BOLT, FLANGE	3					
23	4GY–1443E–00	PIPE, DRAIN	1					
24	90467–15012	CLIP	1					

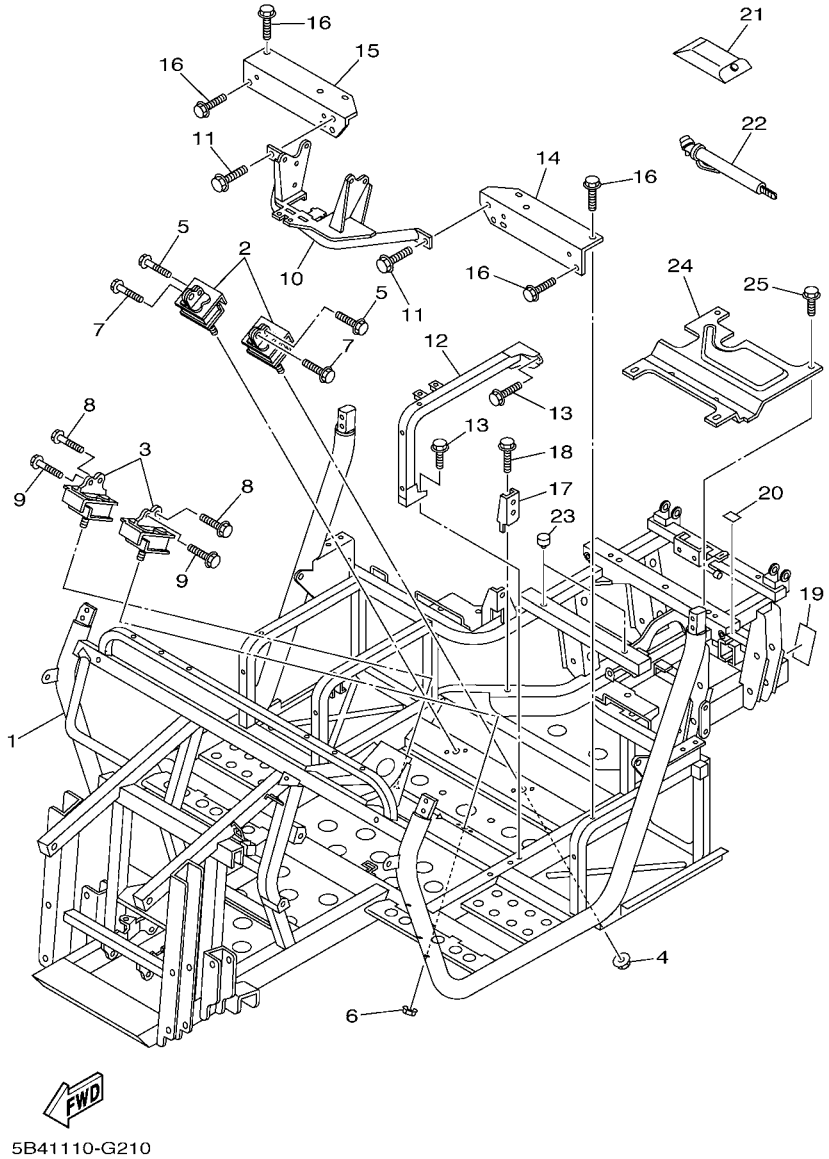

FIG. 21 FRAME

REF. NO.	PART NO.	DESCRIPTION	USA					REMARKS
1	5B4–F1110–00	FRAME COMP.	1					
2	5B4–21485–00	DAMPER, RUBBER 1	2					
3	5B4–21485–00	DAMPER, RUBBER 1	2					
4	95602–10200	NUT, U FLANGE	2					
5	90105–06639	BOLT, FLANGE	2					
6	95602–10200	NUT, U FLANGE	2					
7	95812–10035	BOLT, FLANGE	2					
8	90105–10314	BOLT, FLANGE	2					
9	90105–06639	BOLT, FLANGE	2					
10	5B4–F1986–00	REINFORCEMENT, FRAME 1	1					
11	95812–10020	BOLT, FLANGE	2					
12	5B4–F4103–00	SEAT BRACKET COMP.	1					
13	90105–08867	BOLT, FLANGE	4					
14	5UG–F114H–01	SUPPORT, SEAT	1					
15	5UG–F114J–01	SUPPORT, SEAT	1					
16	90105–08867	BOLT, FLANGE	8					
17	5UG–F116B–00	BRACKET	1					
18	90105–06831	BOLT, FLANGE	1					
19	5B4–F151K–00	LABEL 7	1					ENGLISH
20	5UG–F151J–00	LABEL 6	1					
21	5B4–F8100–00	TOOL KIT	1					
22	5UG–F811A–00	GAUGE, AIR	1					
23	5UG–F7114–00	STOPPER, MAIN STAND	2					
24	5B4–F2898–00	INSULATOR, HEAT	1					
25	90105–06831	BOLT, FLANGE	4					

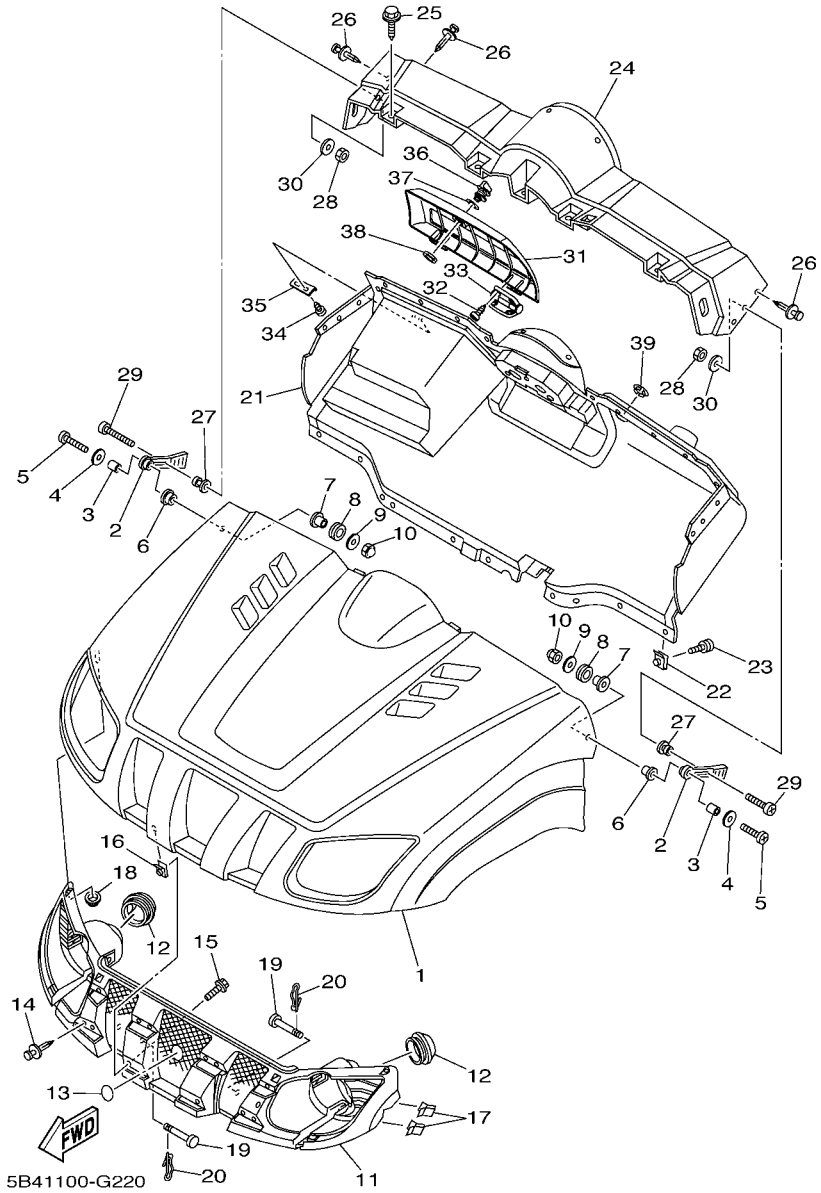

FIG. 22 FRONT FENDER

REF. NO.	PART NO.	DESCRIPTION	USA					REMARKS
1	5UG–F1510–D0	FRONT FENDER COMP.	1					
2	8V0–77171–00	BODY, LATCH 1	2					
3	90387–06241	COLLAR	2					
4	90201–06557	WASHER, PLATE	2					
5	98907–06035	SCREW, BIND	2					
6	90387–062M9	COLLAR	2					
7	90387–077M3	COLLAR	2					
8	90480–15235	GROMMET	2					
9	90201–06557	WASHER, PLATE	2					
10	95302–06800	NUT, CROWN	2					
11	5UG–F8309–11	GRILLE, FRONT	1					
12	5GH–28349–00	CAP	2					
13	5FU–F175B–01	TUNING FORK MARK	1					
14	90269–06804	RIVET	8					
15	90119–05023	BOLT, WITH WASHER	4					
16	90183–050A0	NUT, SPRING	4					
17	5UG–F3447–00	CLIP	4					
18	90183–08800	NUT, SPRING	2					
19	90240–13802	PIN, CLEVIS	2					
20	90468–16191	CLIP	2					
21	5UG–F3391–02	PANEL, FRONT	1					
22	90183–051A1	NUT, SPRING	8					
23	90119–05023	BOLT, WITH WASHER	8					
24	5UG–F3312–D0	PANEL, OUTER 2	1					
25	90119–06868	BOLT, WITH WASHER	4					
26	90269–06800	RIVET	16					
27	8M6–77175–00	HOLDER, LATCH	2					

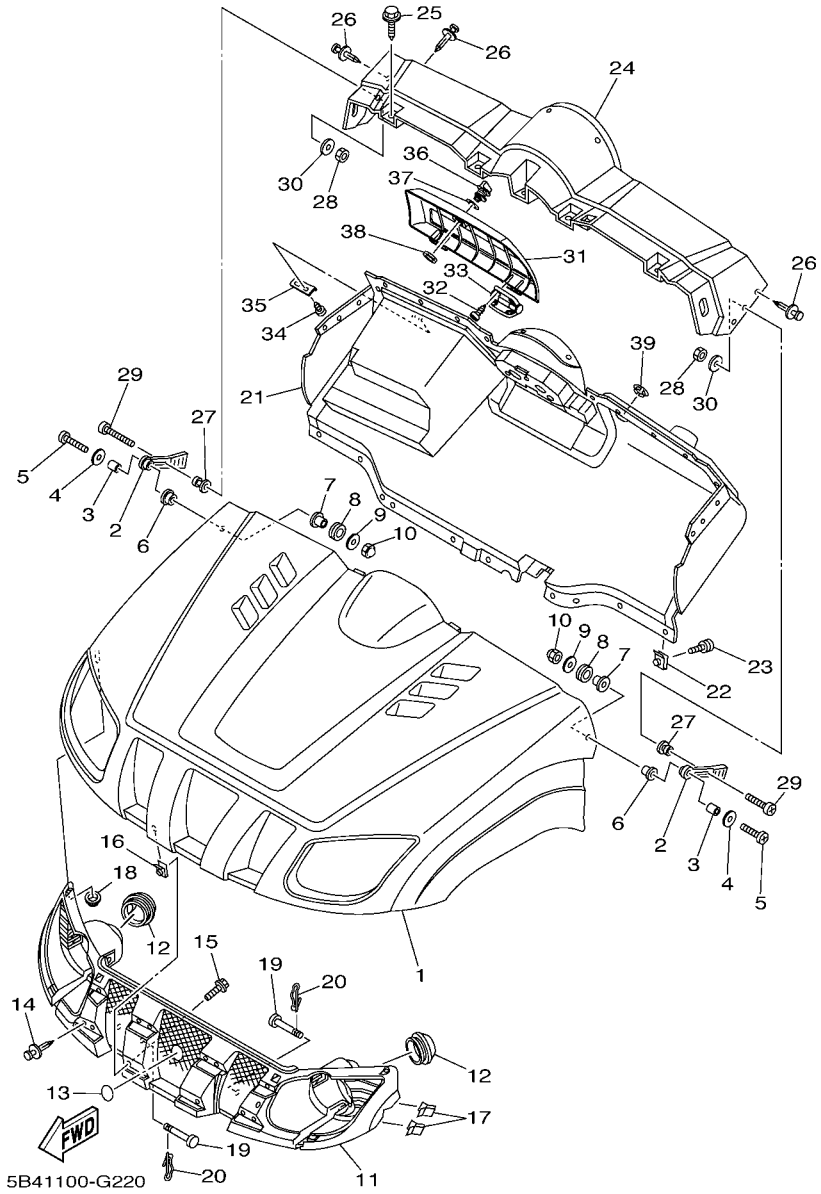

FIG. 22 FRONT FENDER

REF. NO.	PART NO.	DESCRIPTION	USA					REMARKS
28	95702–06300	NUT, NYLON	2					
29	98907–06035	SCREW, BIND	2					
30	90201–06097	WASHER, PLATE	2					
31	5UG–K7736–00	LID, GLOVE BOX	1					
32	90164–04800	SCREW, TAPPING	8					
33	5UG–F1797–00	HINGE	2					
34	90164–05800	SCREW, TAPPING	2					
35	5UG–F139T–00	BRACKET, COVER	1					
36	5UG–F16A0–00	LOCK ASSY	1					
37	5UG–F3139–00	GASKET	1					
38	5UG–F1494–00	NUT	1					
39	5B4–F2417–00	PLUG	1					

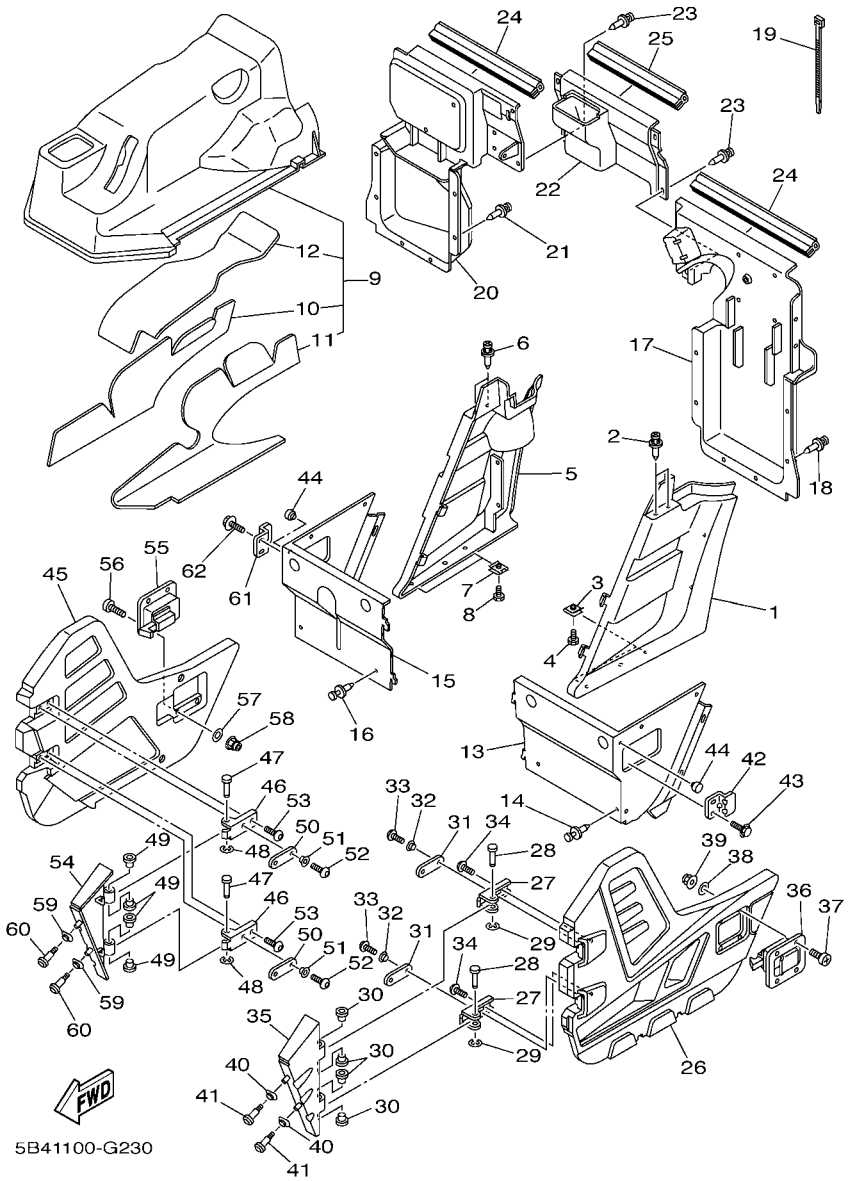

FIG. 23 SIDE COVER

REF. NO.	PART NO.	DESCRIPTION	USA					REMARKS
1	5UG–K810F–01	SIDE PANEL COMP.(L.H)	1					
2	90269–06800	RIVET	2					
3	90183–05008	NUT, SPRING	2					
4	90119–05023	BOLT, WITH WASHER	2					
5	5UG–K810G–01	SIDE PANEL COMP.(R.H)	1					
6	90269–06800	RIVET	2					
7	90183–05008	NUT, SPRING	2					
8	90119–05023	BOLT, WITH WASHER	2					
9	5B4–F8108–00	COVER ASSY	1					
10	5B4–F2873–00	.SEAL 1	1					
11	5B4–F2875–00	.SEAL 3	1					
12	5B4–F2878–00	.SEAL 6	1					
13	5UG–F254J–11	SUPPORT, SIDE PANEL	1					
14	90269–06800	RIVET	7					
15	5UG–F254K–11	SUPPORT, SIDE PANEL 2	1					
16	90269–06800	RIVET	7					
17	5B4–K7561–00	PROTECTOR, SIDE 1	1					
18	90269–06800	RIVET	8					
19	90464–48800	CLAMP	2					
20	5B4–F4141–00	PROTECTOR, FUEL TANK	1					
21	90269–06800	RIVET	8					
22	5B4–F4113–10	PLATE, CONNECTING	1					
23	90269–06800	RIVET	4					
24	5B4–F41A4–00	SEAL 4	2					
25	5B4–F41A5–00	SEAL, 5	1					
26	5B4–F2864–00	COVER, SIDE 1	1					
27	5B4–F1797–00	HINGE	2					

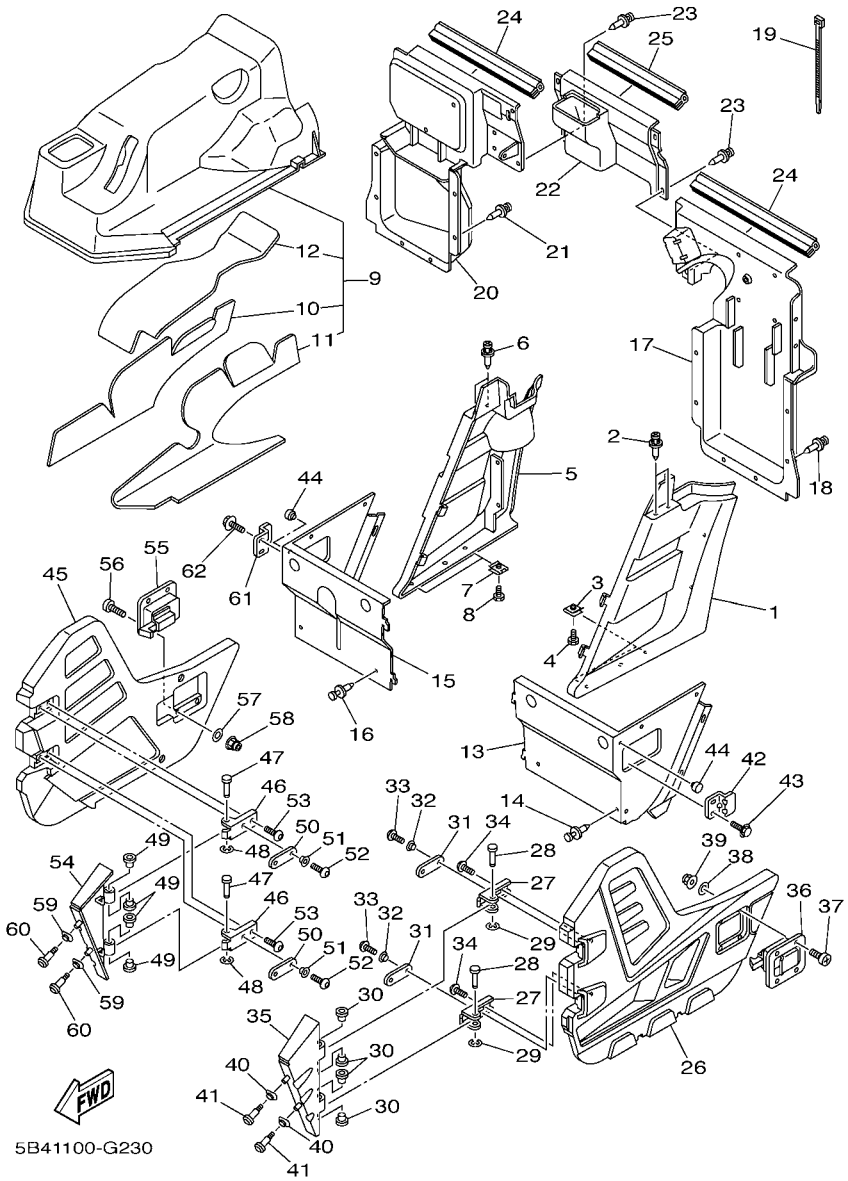

FIG. 23 SIDE COVER

REF. NO.	PART NO.	DESCRIPTION	USA					REMARKS
28	5B4–F146A–00	PIN 1	2					
29	5B4–F3447–00	CLIP	2					
30	2P5–K7515–00	BUSH, RUBBER 1	4					
31	5B4–F2929–00	BAND, RUBBER	2					
32	90387–06089	COLLAR	2					
33	5B4–F1739–00	BOLT	2					
34	5B4–F1722–00	BOLT 2	2					
35	5B4–F197J–00	HINGE 1	1					
36	5B4–F389F–00	HANDLE, LATCH	1					
37	98907–05020	SCREW, BIND	4					
38	5B4–F2149–00	WASHER	4					
39	95602–05200	NUT, SELF-LOCKING	4					
40	5UG–K7526–00	WASHER 2	2					
41	5B4–K7519–00	BOLT	2					
42	5B4–F389E–00	LATCH	1					
43	5B4–F1738–00	BOLT	2					
44	5TG–82121–10	PAD, BATTERY	2					
45	5B4–F2868–00	COVER, SIDE 2	1					
46	5B4–F1797–00	HINGE	2					
47	5B4–F146A–00	PIN 1	2					
48	5B4–F3447–00	CLIP	2					
49	2P5–K7515–00	BUSH, RUBBER 1	4					
50	5B4–F2929–00	BAND, RUBBER	2					
51	90387–06089	COLLAR	2					
52	5B4–F1739–00	BOLT	2					
53	5B4–F1722–00	BOLT 2	2					
54	5B4–F197K–00	HINGE 2	1					

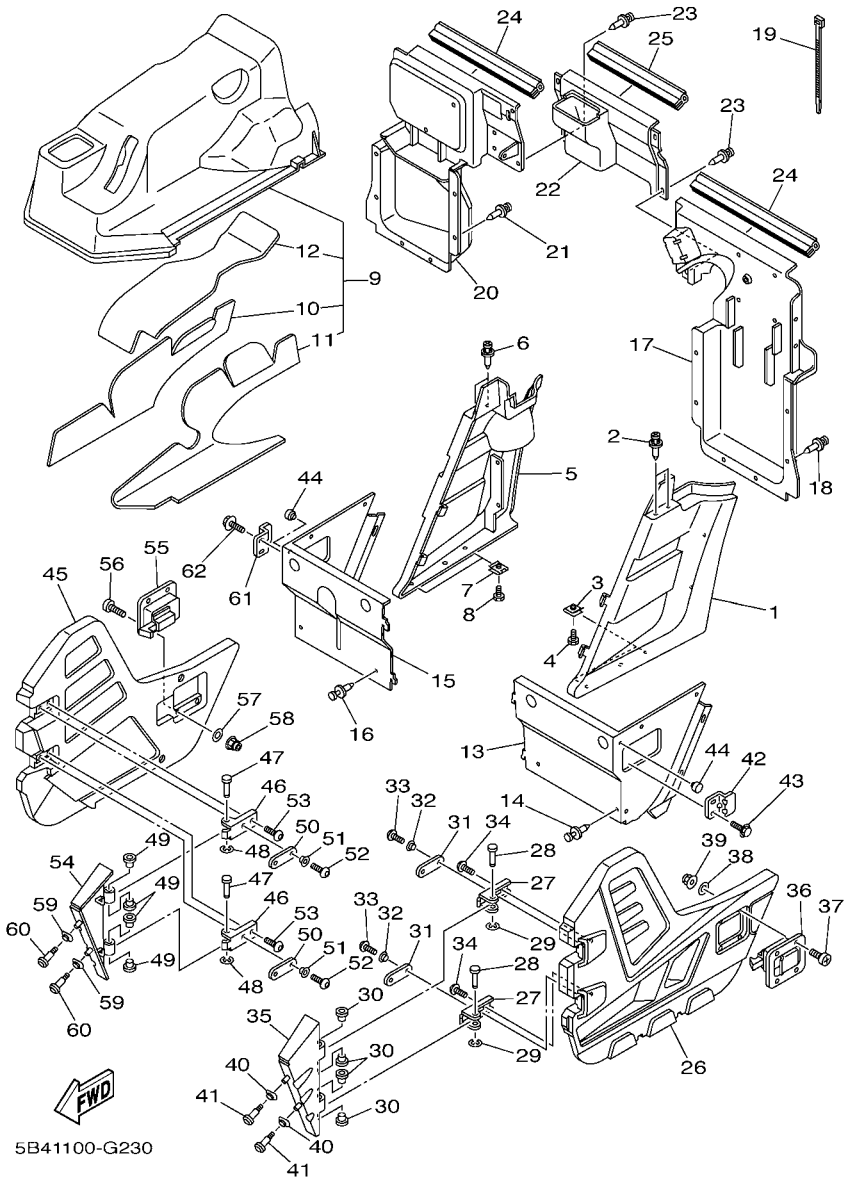

FIG. 23 SIDE COVER

REF. NO.	PART NO.	DESCRIPTION	USA					REMARKS
55	5B4–F389F–00	HANDLE, LATCH	1					
56	98907–05020	SCREW, BIND	4					
57	5B4–F2149–00	WASHER	4					
58	95602–05200	NUT, SELF-LOCKING	4					
59	5UG–K7526–00	WASHER 2	2					
60	5B4–K7519–00	BOLT	2					
61	5B4–F389E–00	LATCH	1					
62	5B4–F1738–00	BOLT	2					

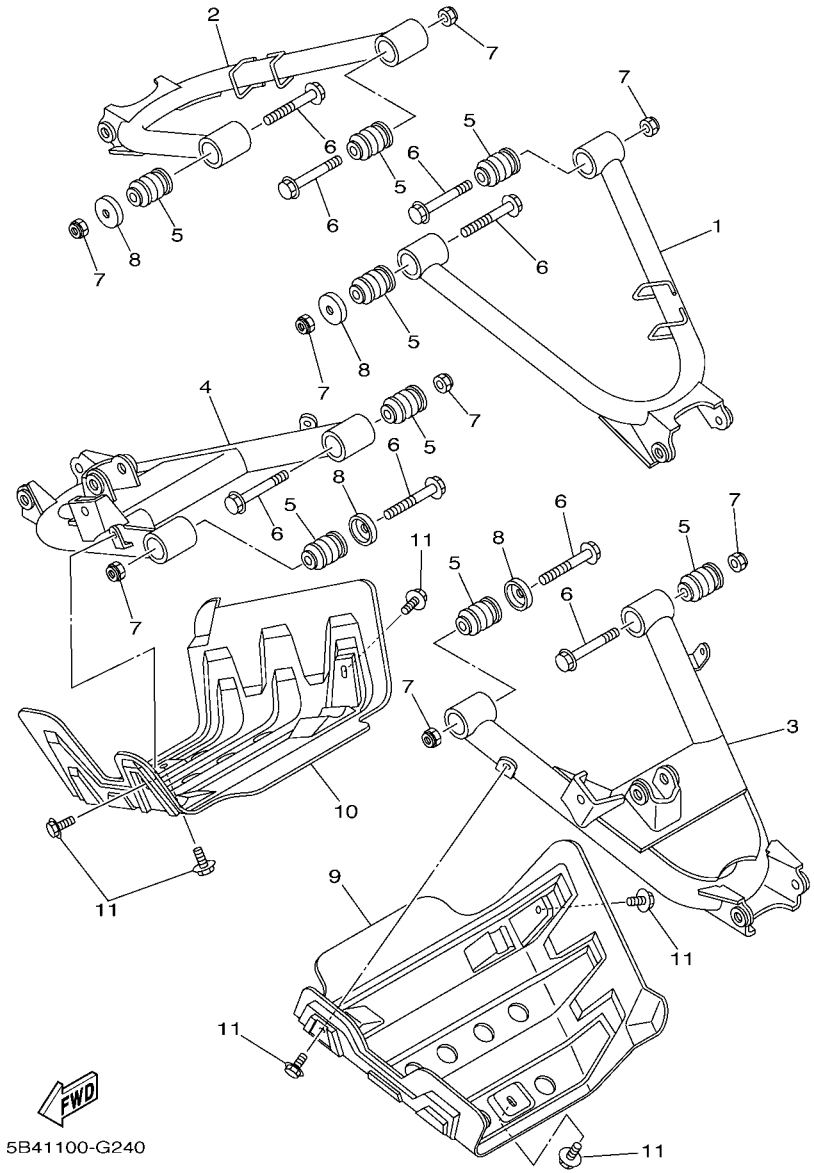

FIG. 24 REAR ARM

REF. NO.	PART NO.	DESCRIPTION	USA					REMARKS
1	5B4–F2171–00	ARM, REAR 1	1					
2	5B4–F2172–00	ARM, REAR 2	1					
3	5B4–F217M–00	ARM 1	1					
4	5B4–F217N–00	ARM 2	1					
5	5KM–23526–00	BUSH	8					
6	90105–10267	BOLT, FLANGE	8					
7	90185–10012	NUT, SELF-LOCKING	8					
8	5KM–22149–10	WASHER	4					
9	5B4–F2128–00	COVER, THRUST 1	1					
10	5B4–F2129–00	COVER, THRUST 2	1					
11	90119–06868	BOLT, WITH WASHER	6					

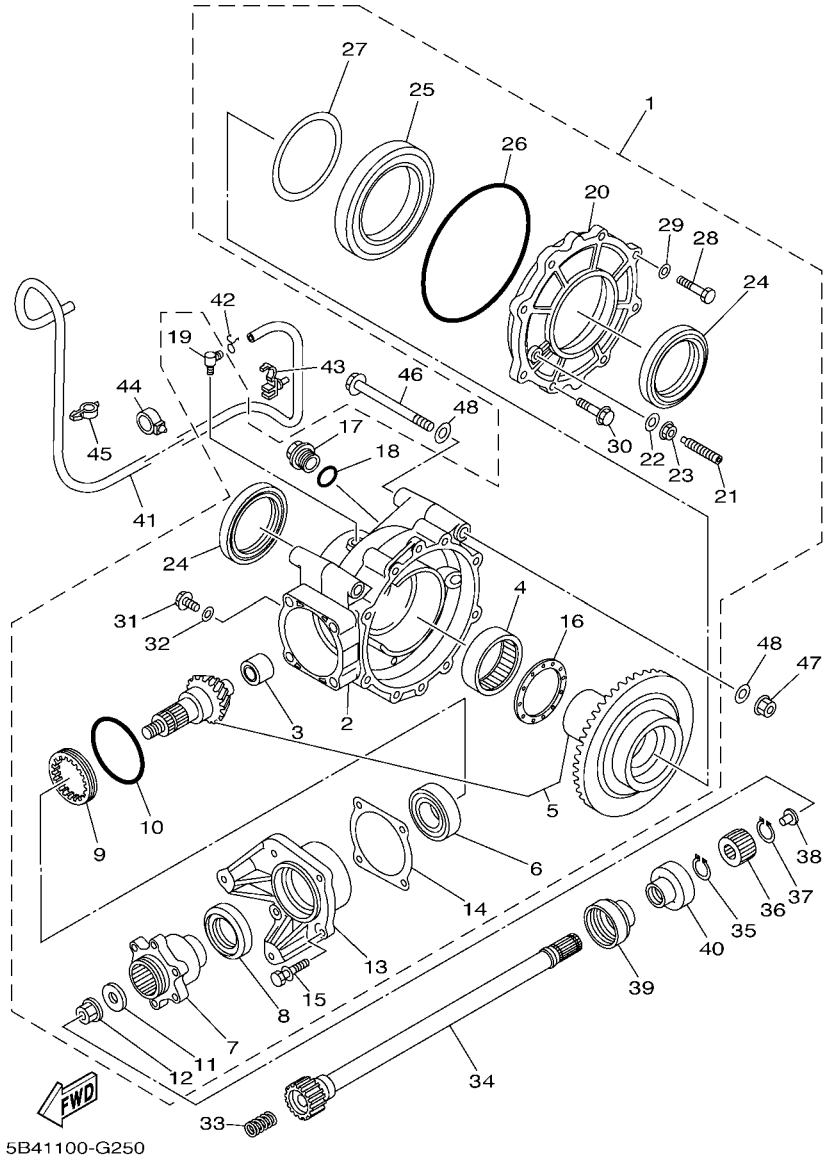

FIG. 25 DRIVE SHAFT

REF. NO.	PART NO.	DESCRIPTION	USA					REMARKS
1	5UG–46101–10	REAR AXLE GEAR CASE ASSY	1					
2	5UG–46151–01	.HOUSING, DRIVE SHAFT	1					
3	5KM–46102–00	.BEARING ASSY	1					
4	93317–85569	.BEARING	1					
5	5UG–Y4612–00	.RING GEAR SET	1					
6	93306–30574	.BEARING	1					
7	5UG–46212–00	.BOSS, 1	1					
8	93102–35009	.OIL SEAL	1					
9	90179–65305	.NUT	1					
10	93210–626A7	.O-RING	1					
11	90201–12029	.WASHER, PLATE	1					
12	90179–12325	.NUT	1					
13	5UG–46144–00	.HOUSING, PINION BEARING	1					
14	2HR–46127–00–25	.SHIM, DRIVE PISTON (0.25T)	1					UR
	2HR–46127–00–30	.SHIM, DRIVE PISTON (0.30T)	1					UR
	2HR–46127–00–35	.SHIM, DRIVE PISTON (0.35T)	1					UR
	2HR–46127–00–40	.SHIM, DRIVE PISTON (0.40T)	1					UR
	2HR–46127–00–45	.SHIM, DRIVE PISTON (0.45T)	1					UR
	2HR–46127–00–50	.SHIM, DRIVE PISTON (0.50T)	1					UR
15	90119–08125	.BOLT, WITH WASHER	4					
16	24W–46118–00–12	.WASHER, THRUST (1.2T)	1					UR
	24W–46118–00–14	.WASHER, THRUST (1.4T)	1					UR
	24W–46118–00–16	.WASHER, THRUST (1.6T)	1					UR
	24W–46118–00–18	.WASHER, THRUST (1.8T)	1					UR
	24W–46118–00–20	.WASHER, THRUST (2.0T)	1					UR
17	90340–20143	.PLUG, STRAIGHT SCREW	1					
18	93210–19123	.O-RING	1					

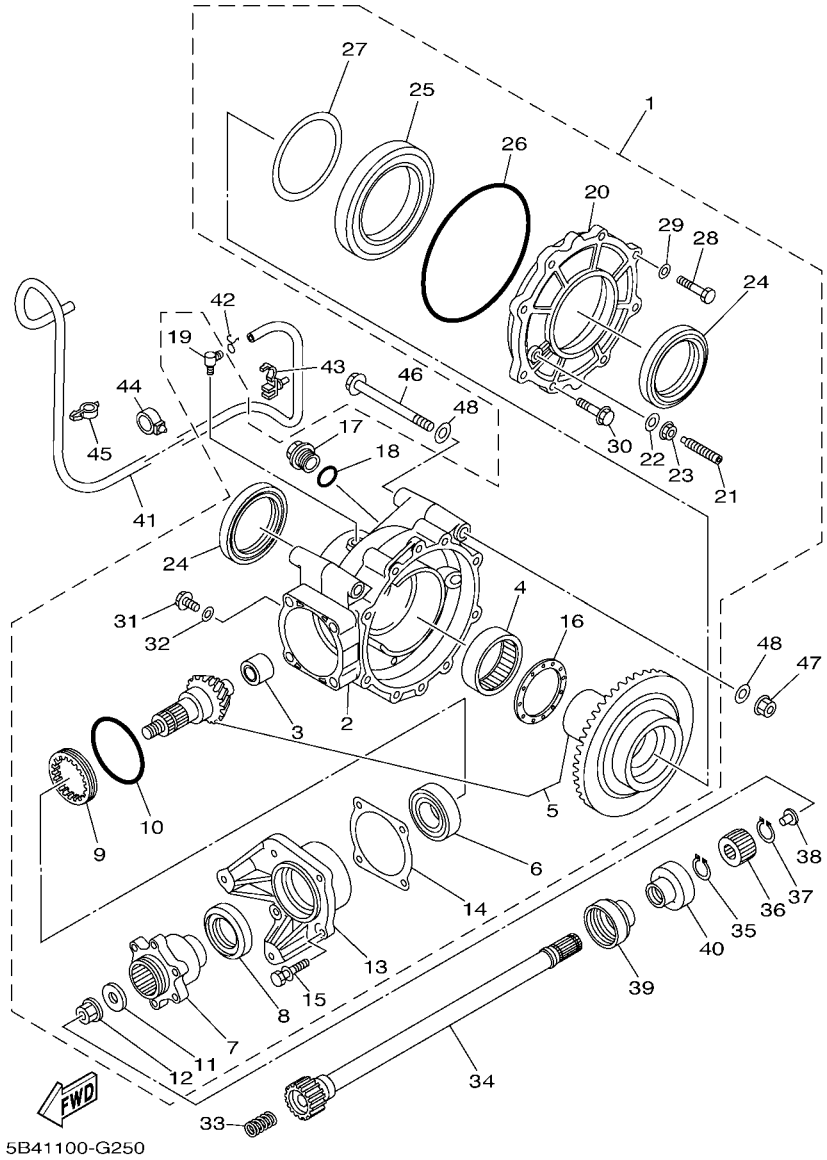

FIG. 25 DRIVE SHAFT

REF. NO.	PART NO.	DESCRIPTION	USA					REMARKS
19	5UG–15371–00	.BREATHER	1					
20	5KM–46152–00	.HOUSING, BEARING	1					
21	2HR–46156–00	.STOPPER, RING GEAR	1					
22	90201–08087	.WASHER, PLATE	1					
23	95702–08500	.NUT, WITH WASHER	1					
24	93102–65008	.OIL SEAL	2					
25	93316–01701	.BEARING	1					
26	93211–51749	.O-RING	1					
27	22U–46117–00–25	.SHIM, RING GEAR (0.25T)	1					UR
	22U–46117–00–30	.SHIM, RING GEAR (0.30T)	1					UR
	22U–46117–00–40	.SHIM, RING GEAR (0.40T)	1					UR
28	97022–08025	.BOLT	6					
29	92902–08600	.WASHER, PLATE	6					
30	95812–10025	.BOLT, FLANGE	2					
31	95022–10016	.BOLT, FLANGE	1					
32	90430–10171	.GASKET	1					
33	90501–18002	SPRING, COMPRESSION	1					
34	5B4–G6172–00	SHAFT, DRIVE	1					
35	99009–19400	CIRCLIP	1					
36	5KM–46126–00	COUPLING	1					
37	93410–22039	CIRCLIP	1					
38	5KM–46559–00	DAMPER	1					
39	5KM–46137–00	SEAL 2	1					
40	5KM–46136–00	SEAL 1	1					
41	90445–074F6	HOSE (L1300)	1					
42	90467–07029	CLIP	1					
43	90464–12830	CLAMP	2					

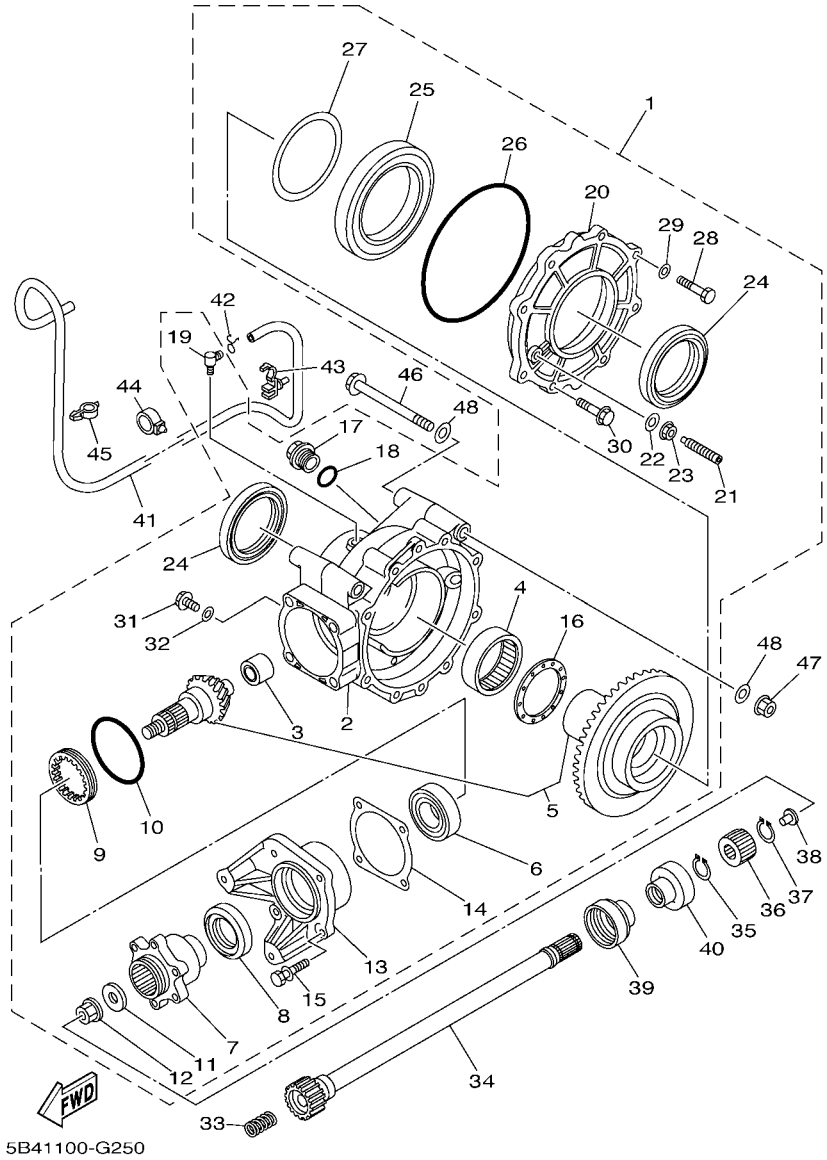

FIG. 25 DRIVE SHAFT

REF. NO.	PART NO.	DESCRIPTION	USA					REMARKS
44	90464–19815	CLAMP	2					
45	90464–10833	CLAMP	1					
46	90105–10220	BOLT, FLANGE	2					
47	90185–10011	NUT, SELF-LOCKING	2					
48	90201–10035	WASHER, PLATE	4					

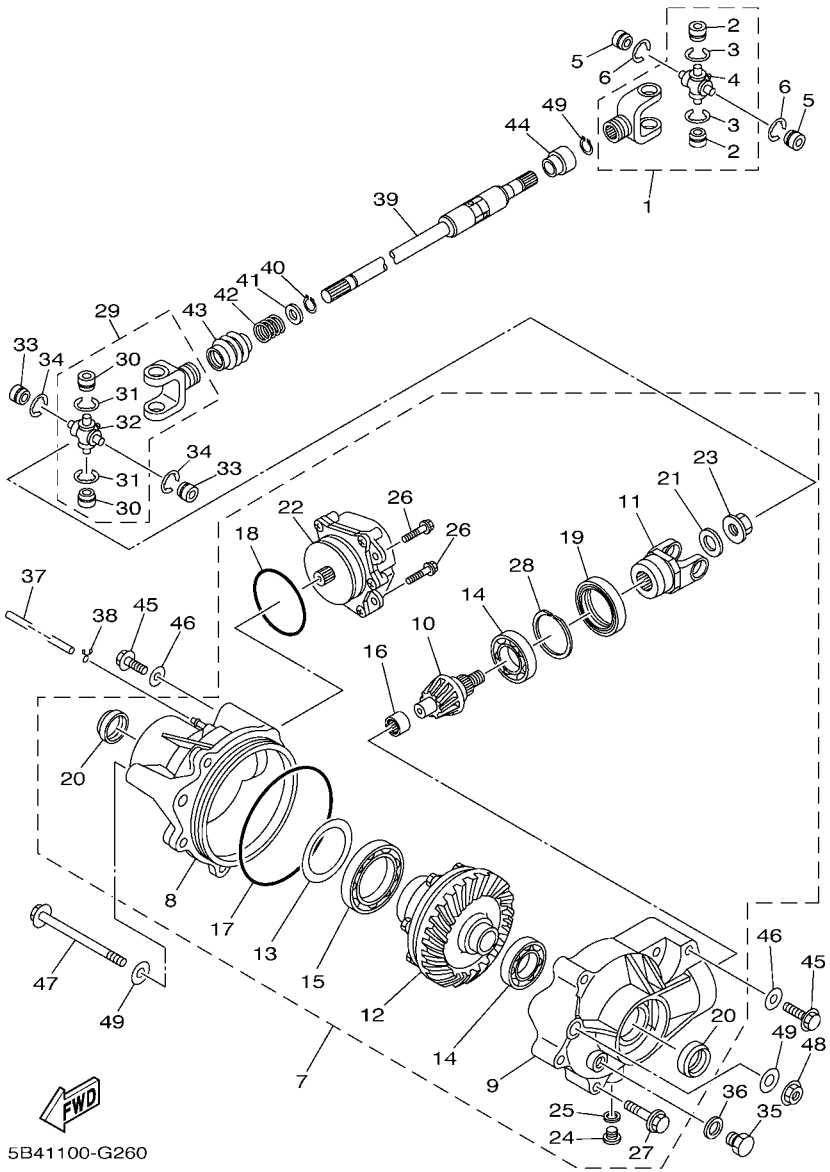

FIG. 26 FRONT DIFFERENTIAL

REF. NO.	PART NO.	DESCRIPTION	USA					REMARKS
1	2P5–46108–01	CROSS JOINT COMP. 3	1					
2	93399–99948	.BEARING	2					
3	93440–20088	.CIRCLIP	2					
4	5GT–46187–00	.SPIDER	1					
5	93399–99948	BEARING	2					
6	93440–20088	CIRCLIP	2					
7	5B4–46160–00	FRONT AXLE GEAR CASE COMP.	1					
8	5B4–46162–00	.HOUSING, BEARING 2	1					
9	5B4–46161–00	.HOUSING, SHAFT DRIVE 2	1					
10	3B4–46141–00	.PINION, DRIVE 2	1					
11	4S1–46146–00	.YOKE, JOINT 2	1					
12	3B4–46470–01	.LIMITED SLIP DIFF. ASSY	1					
13	3B4–46117–00	.SHIM, RING GEAR (0.1T)	1					UR
	3B4–46117–10	.SHIM, RING GEAR (0.2T)	1					UR
	3B4–46117–20	.SHIM, RING GEAR (0.3T)	1					UR
	3B4–46117–30	.SHIM, RING GEAR (0.4T)	1					UR
14	93306–00613	.BEARING	2					
15	3B4–46164–00	.BEARING 1	1					
16	3B4–46166–00	.BEARING 3	1					
17	3B4–46134–00	.O-RING 1	1					
18	3B4–46135–00	.O-RING 2	1					
19	93105–46001	.OIL SEAL	1					
20	3B4–46163–00	.SEAL,OIL 1	2					
21	3B4–47359–00	.WASHER	1					
22	3B4–4616A–00	.SERVO MOTOR COMP	1					
23	4WV–46145–10	.NUT 1	1					
24	90340–10001	.PLUG, STRAIGHT SCREW	1					

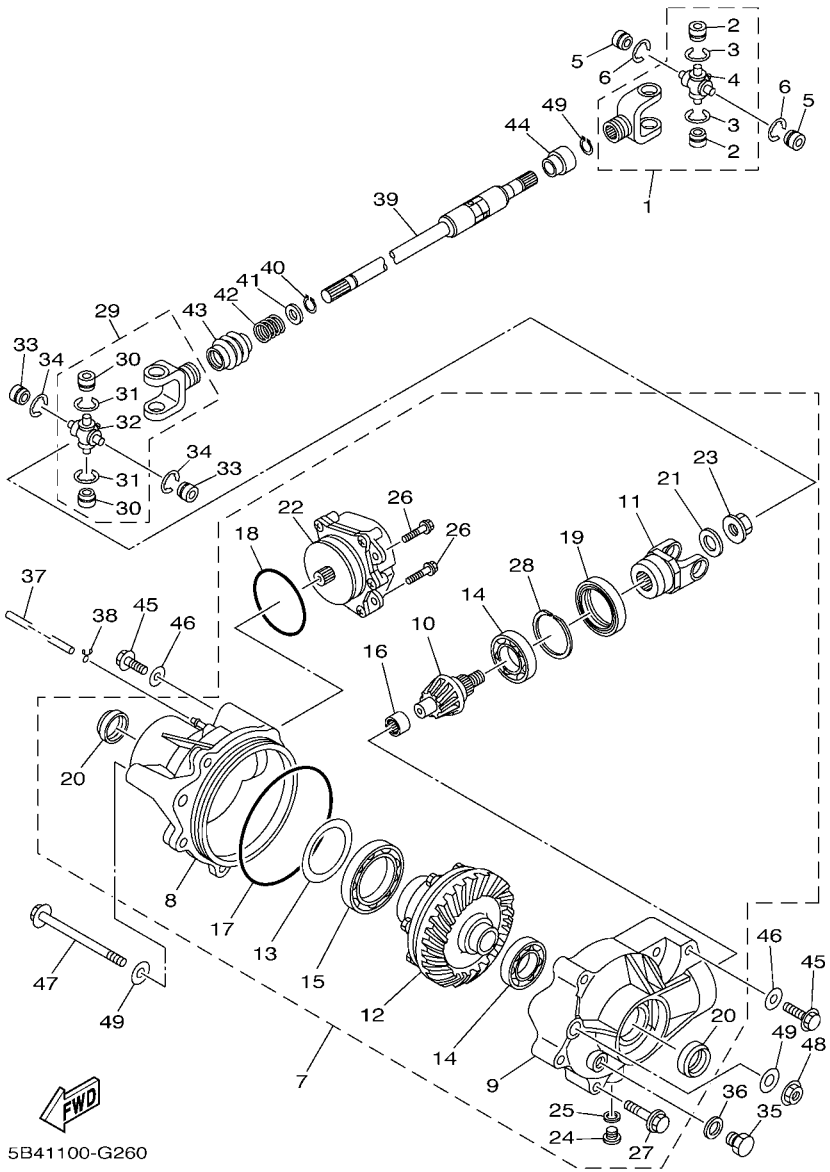

FIG. 26 FRONT DIFFERENTIAL

REF. NO.	PART NO.	DESCRIPTION	USA					REMARKS
25	90430–10003	.GASKET	1					
26	95812–06014	.BOLT, FLANGE	3					
27	95812–08040	.BOLT, FLANGE	5					
28	3B4–46142–00	.RING,HOLE SNAP 1	1					
29	2P5–46108–01	CROSS JOINT COMP. 3	1					
30	93399–99948	.BEARING	2					
31	93440–20088	.CIRCLIP	2					
32	5GT–46187–00	.SPIDER	1					
33	93399–99948	BEARING	2					
34	93440–20088	CIRCLIP	2					
35	90340–14029	PLUG, STRAIGHT SCREW	1					
36	214–11198–01	GASKET	1					
37	90445–070G6	HOSE (L1700)	1					
38	90467–07029	CLIP	1					
39	5B4–46171–00	SHAFT DRIVE ASSY	1					
40	99009–19400	CIRCLIP	2					
41	90201–20266	WASHER, PLATE (T=1.0)	1					
42	90501–235L9	SPRING, COMPRESSION	1					
43	5GT–46136–00	SEAL 1	1					
44	5GT–46137–00	SEAL 2	1					
45	95812–10030	BOLT, FLANGE	2					
46	90201–10035	WASHER, PLATE	2					
47	90105–10230	BOLT, FLANGE	1					
48	90185–10011	NUT, SELF-LOCKING	1					
49	90201–10035	WASHER, PLATE	2					

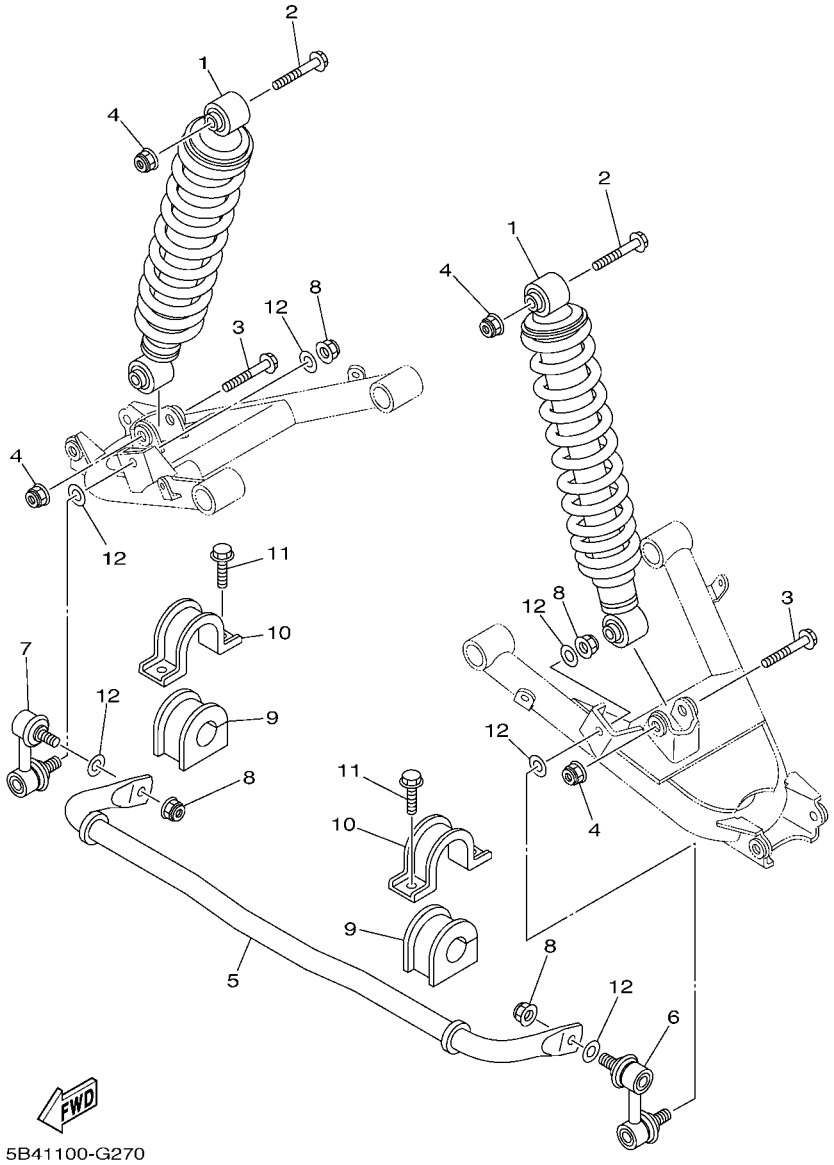

FIG. 27 REAR SUSPENSION

REF. NO.	PART NO.	DESCRIPTION	USA					REMARKS
1	5B4–F2210–00	SHOCK ABSORBER ASSY, REAR	2					
2	90105–12056	BOLT, FLANGE	2					
3	90105–12055	BOLT, FLANGE	2					
4	90185–12009	NUT, SELF-LOCKING	4					
5	5UG–G7491–00	BAR, STABILIZER	1					
6	5KM–2385L–01	JOINT, STABILIZER 1	1					
7	5KM–2385M–01	JOINT, STABILIZER 2	1					
8	90185–10012	NUT, SELF-LOCKING	4					
9	5UG–F386G–00	BUSH, STABILIZER FRONT	2					
10	5UG–F386H–00	COVER, STABILIZER FRONT	2					
11	95812–08014	BOLT, FLANGE	4					
12	90201–10035	WASHER, PLATE	6					

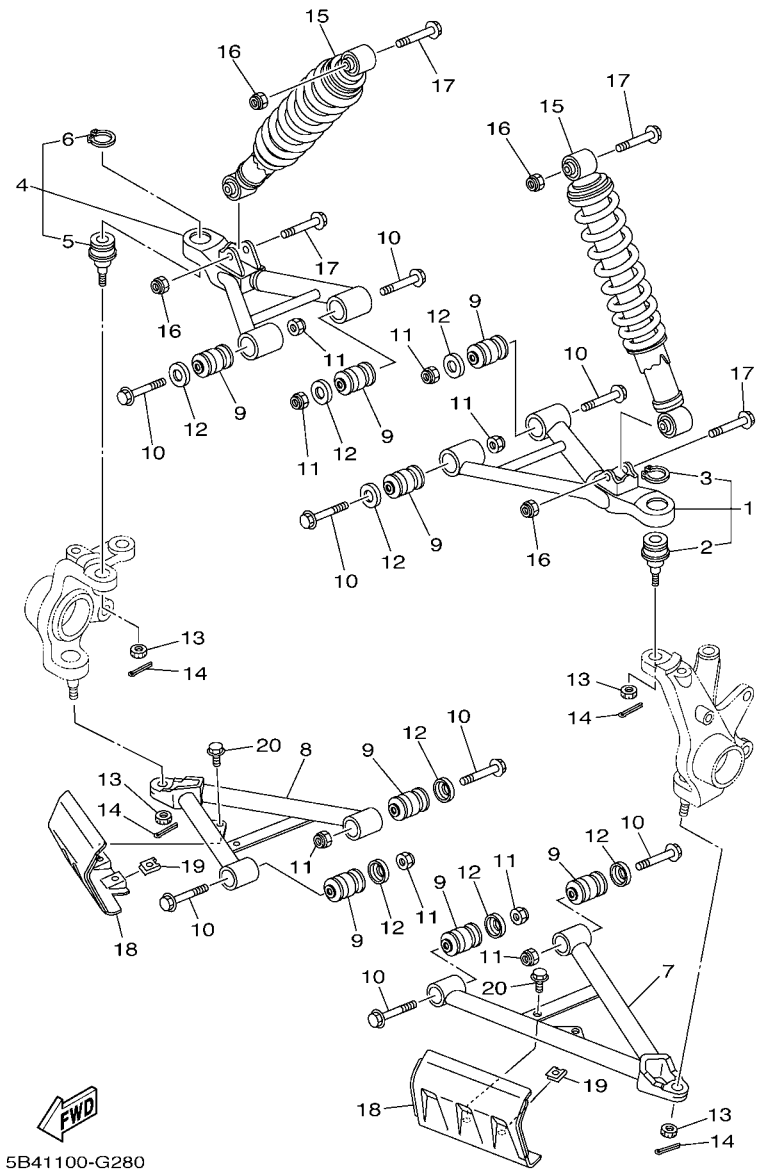

FIG. 28 FRONT SUSPENSION & WHEEL

REF. NO.	PART NO.	DESCRIPTION	USA					REMARKS
1	5UG–F3540–00	FRONT UPPER ARM COMP. (LEFT)	1					
2	5FU–F3549–00	.BALL JOINT 1	1					
3	99009–32400	.CIRCLIP	1					
4	5UG–F3550–00	FRONT UPPER ARM COMP. (RIGHT)	1					
5	5FU–F3549–00	.BALL JOINT 1	1					
6	99009–32400	.CIRCLIP	1					
7	5UG–F357A–00	ARM,FR. LWR. LH.	1					
8	5UG–F358A–00	ARM,FR. LWR. RH.	1					
9	5KM–23526–00	BUSH	8					
10	90105–10267	BOLT, FLANGE	8					
11	90185–10012	NUT, SELF-LOCKING	8					
12	5KM–22149–10	WASHER	8					
13	90171–12001	NUT, CASTLE	4					
14	91402–25020	PIN, COTTER	4					
15	5B4–F3350–00	SHOCK ABSORBER ASSY	2					
16	90185–10012	NUT, SELF-LOCKING	4					
17	90105–10841	BOLT, FLANGE	4					
18	5B4–F3123–00	COVER, UNDER 1	2					
19	90183–06053	NUT, SPRING	4					
20	95802–06012	BOLT, FLANGE	4					

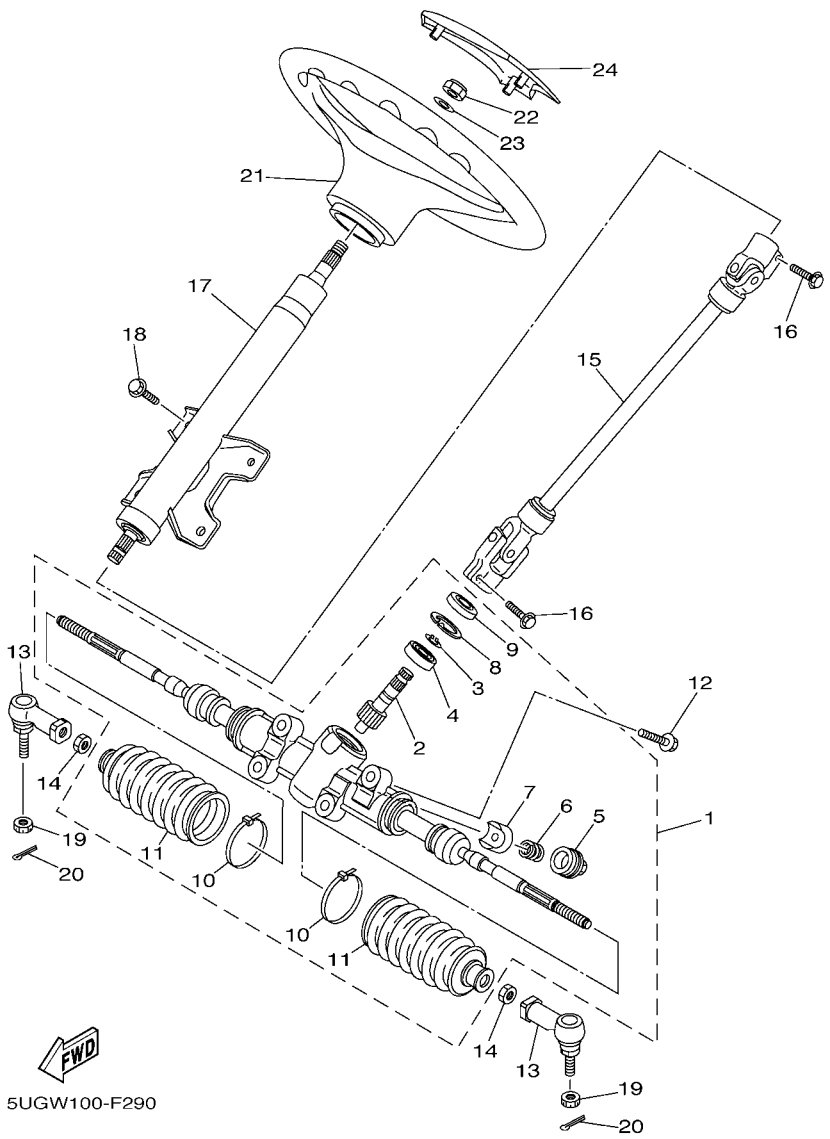

FIG. 29 STEERING

REF. NO.	PART NO.	DESCRIPTION	USA					REMARKS
1	5UG–F3400–00	STEERING ASSY	1					
2	5UG–F3863–00	.GEAR, STEERING DRIVE	1					
3	5UG–F3183–00	.CIRCLIP	1					
4	5UG–F3812–00	.PLANE BEARING, STEERING	1					
5	5UG–F387G–00	.COVER, ADJUST	1					
6	5UG–F387K–00	.SPRING, PRESSURE	1					
7	5UG–F387F–00	.PAD, PRESSURE	1					
8	5UG–F387J–00	.RING, STOPPER	1					
9	5UG–F3844–00	.SEAL	1					
10	5UG–F3489–00	.BAND	2					
11	5UG–F3527–00	.SEAL, DUST 1	2					
12	95022–10025	BOLT, FLANGE	4					
13	5UG–F3841–00	JOINT, UNIVERSAL 1	2					
14	4XE–F3833–00	NUT 1	2					
15	5UG–F3840–00	STEERING SHAFT ASSY	1					
16	95022–08025	BOLT, FLANGE	2					
17	5UG–F3811–00	COLUMN, STEERING	1					
18	95812–08016	BOLT, FLANGE	4					
19	90171–12001	NUT, CASTLE	2					
20	91402–20020	PIN, COTTER	2					
21	5UG–F3838–10	WHEEL, STEERING	1					
22	90185–12008	NUT, SELF-LOCKING	1					
23	92902–12200	WASHER	1					
24	5UG–F3818–10	COVER, STEERING	1					

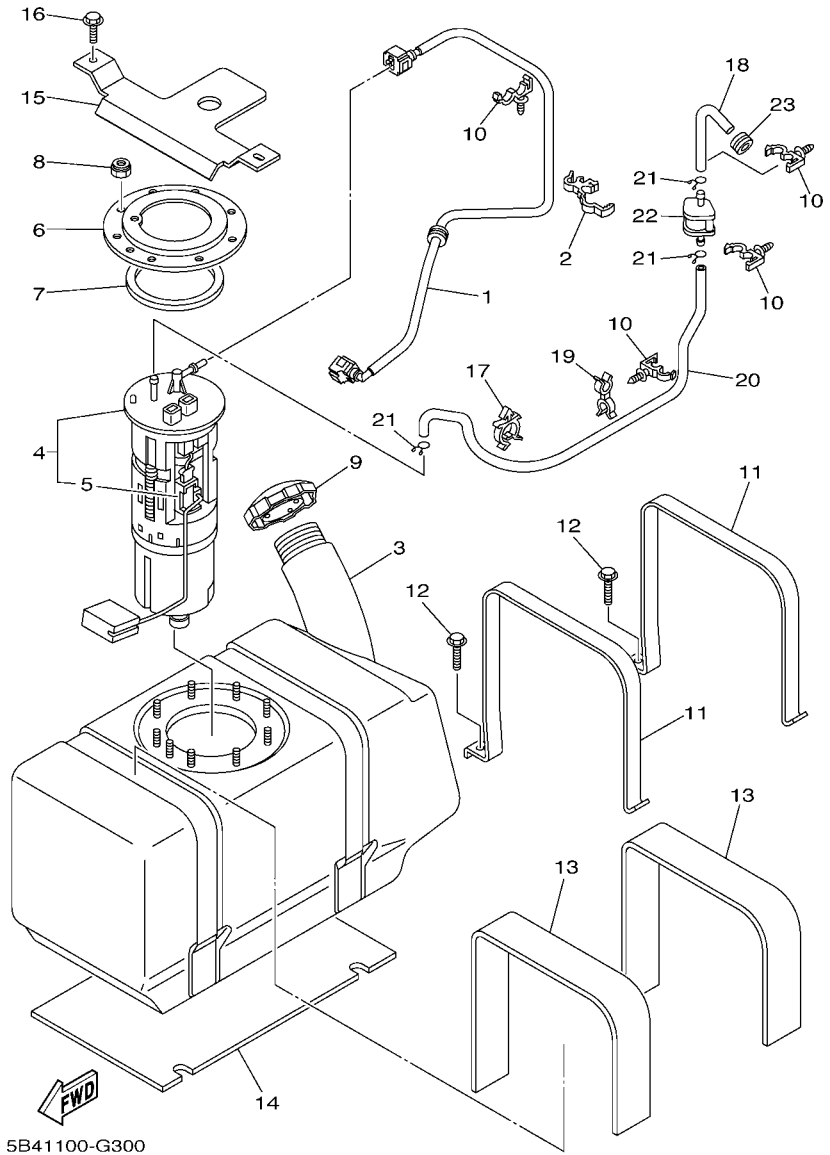

FIG. 30 FUEL TANK

REF. NO.	PART NO.	DESCRIPTION	USA					REMARKS
1	5B4–13971–00	PIPE, FUEL 1	1					
2	90464–12012	CLAMP	1					
3	5B4–F4111–00	TANK, FUEL	1					
4	5B4–13907–00	FUEL PUMP COMP.	1					
5	5B4–85701–00	.SENDER ASSY	1					
6	5B4–U7773–00	RING	1					
7	F1B–67747–00	PACKING, SEAL	1					
8	95602–06100	NUT, U	9					
9	2P5–24610–00	CAP ASSY	1					
10	90464–12830	CLAMP	4					
11	5B4–F4157–00	STAY, FUEL TANK 1	2					
12	90105–08879	BOLT, FLANGE	2					
13	5UG–F414H–00	DAMPER, PLATE 1	2					
14	5UG–F414J–00	DAMPER, PLATE 2	1					
15	5B4–F4145–00	DAMPER, SIDE COVER	1					
16	90105–08867	BOLT, FLANGE	2					
17	90464–25826	CLAMP	1					
18	5B4–F4312–00	PIPE 2	1					
19	90464–13103	CLAMP	1					
20	5B4–F4314–00	PIPE 4	1					
21	90467–10008	CLIP	3					
22	3B4–24380–10	PIPE JOINT ASSY	1					
23	90480–15058	GROMMET	1					

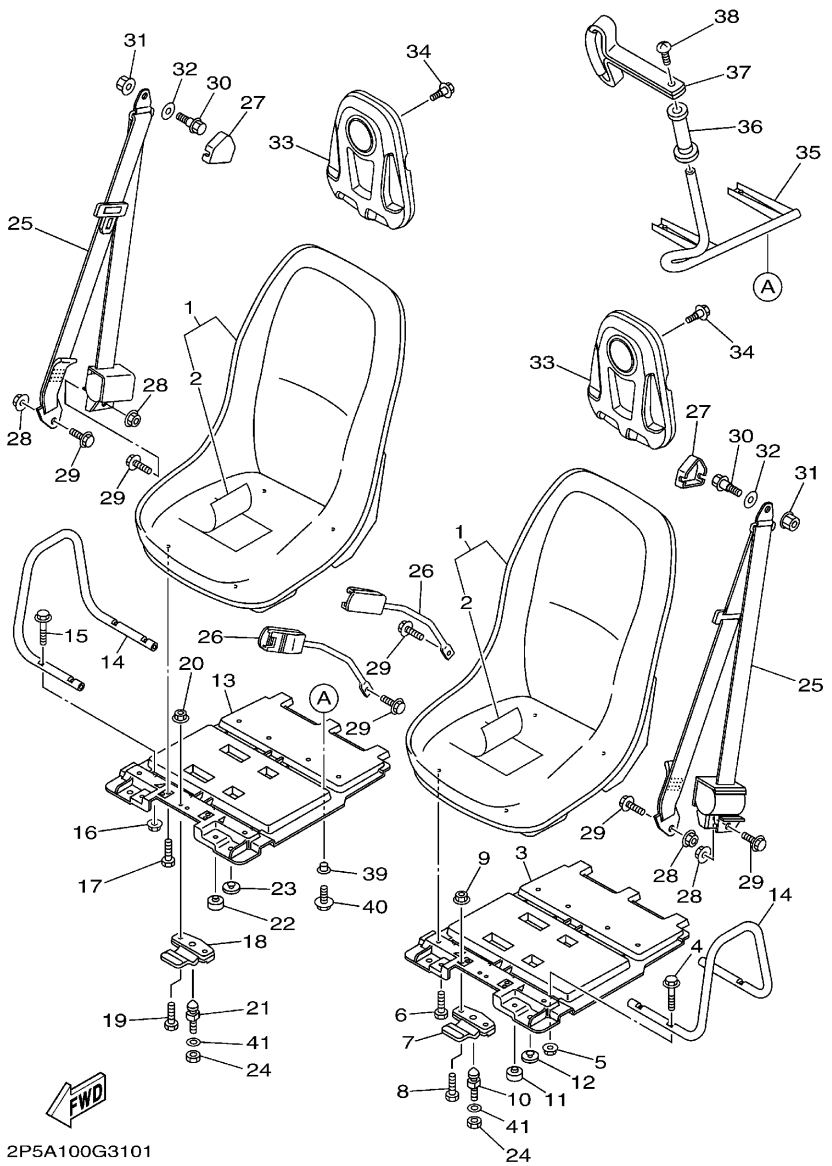

FIG. 31 SEAT

REF. NO.	PART NO.	DESCRIPTION	USA					REMARKS
1	5UG–F4710–00	SINGLE SEAT ASSY	2					
2	5UG–F470F–00	.SEAT COVER COMP.	1					
3	5UG–F470E–01	BOTTOM PLATE COMP.	1					
4	95812–08030	BOLT, FLANGE	4					
5	95602–08200	NUT, SELF-LOCKING	4					
6	95822–08020	BOLT, FLANGE	4					
7	F1B–U3850–02	SEAT LOCK ASSY	1					
8	95822–06040	BOLT, FLANGE	2					
9	95602–06200	NUT, SELF-LOCKING	2					
10	GH1–U3774–00	PIN	1					
11	4XE–F4747–00	DAMPER, SEAT	2					
12	371–82121–00	PAD, BATTERY	2					
13	5UG–F470E–01	BOTTOM PLATE COMP.	1					
14	2P5–F474W–00	ASSIST,GRIP 2	2					
15	95812–08030	BOLT, FLANGE	4					
16	95602–08200	NUT, SELF-LOCKING	4					
17	95822–08020	BOLT, FLANGE	4					
18	F1B–U3850–02	SEAT LOCK ASSY	1					
19	95822–06040	BOLT, FLANGE	2					
20	95602–06200	NUT, SELF-LOCKING	2					
21	GH1–U3774–00	PIN	1					
22	4XE–F4747–00	DAMPER, SEAT	2					
23	371–82121–00	PAD, BATTERY	2					
24	90185–10012	NUT, SELF-LOCKING	2					
25	5UG–G6241–00	BELT	2					
26	5UG–G6242–00	BELT 2	2					
27	5UG–F4796–00	COVER	2					

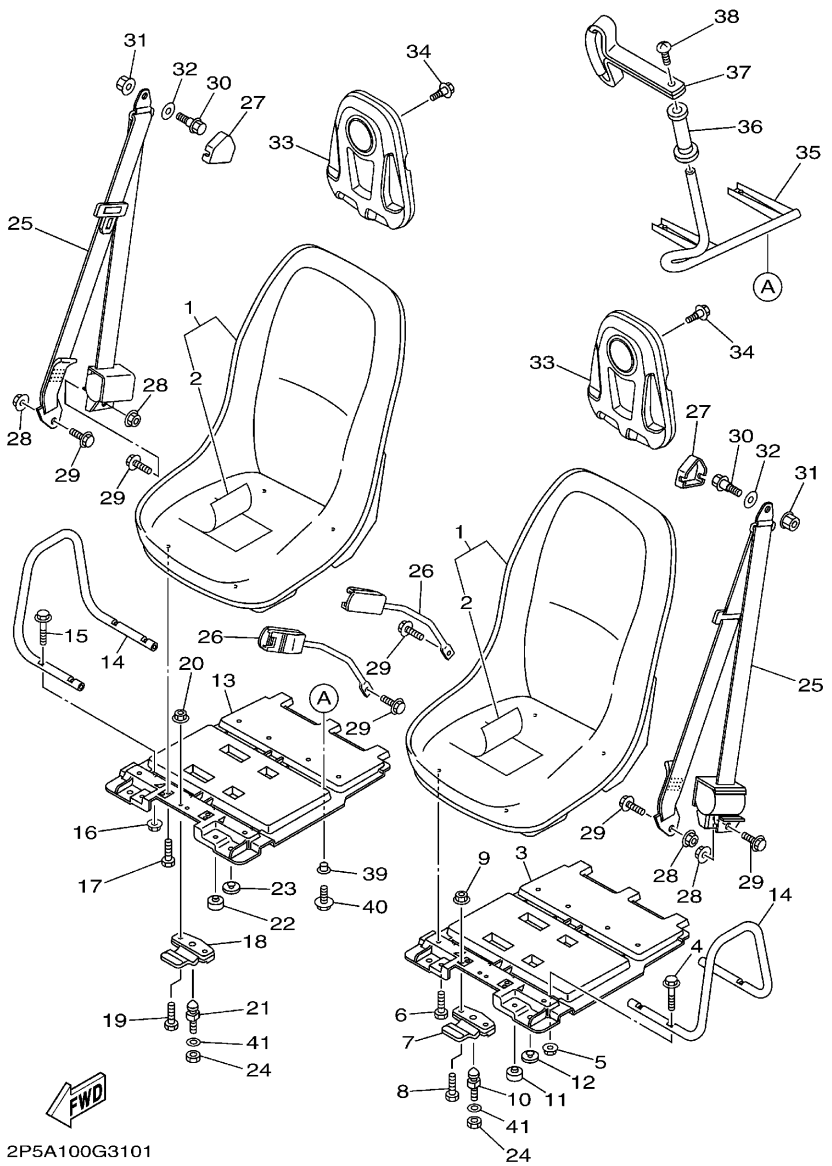

FIG. 31 SEAT

REF. NO.	PART NO.	DESCRIPTION	USA					REMARKS
28	95602–10200	NUT, U FLANGE	4					
29	95812–10022	BOLT, FLANGE	6					
30	5UG–F3394–00	BOLT, SPECIAL	2					
31	5UG–F4735–01	SPEED NUT	2					
32	90201–11801	WASHER, PLATE	2					
33	5UG–F472L–50	HEAD REST	2					
34	90109–063F5	BOLT	6					
35	5B4–F474A–00	ASSIST, GRIP	1					
36	5B4–F6241–00	GRIP	1					
37	5B4–F4773–00	HANDLE, SEAT	1					
38	98907–06020	SCREW, BIND	1					
39	90387–06210	COLLAR	4					
40	90105–06831	BOLT, FLANGE	4					
41	90201–109U6	WASHER, PLATE	2					

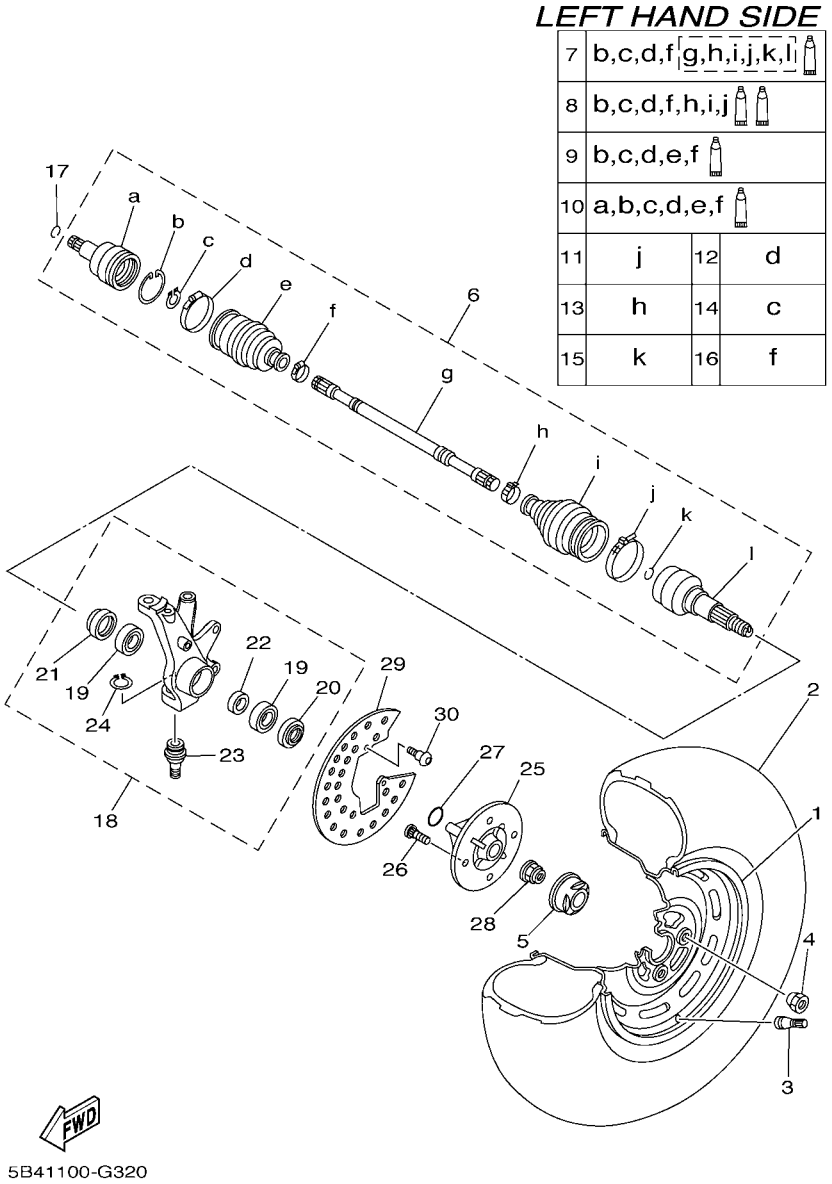

FIG. 32 FRONT WHEEL

REF. NO.	PART NO.	DESCRIPTION	USA					REMARKS
1	5UG–F5180–00	WHEEL COMP.	1					
2	94108–12809	TIRE (25X8.00-12 M951Y TL)	1					CHENG SHIN
3	93900–00813	VALVE, RIM (TR413)	1					
4	90179–10022	NUT	4					
5	2P5–F512A–00	CAP, WHEEL	1					
6	5B4–F518F–00	DRIVE SHAFT ASSY	1					
7	5B4–F510F–00	.BALL JOINT SET	1					
8	5B4–F510G–00	.BOOT SET (BALL JOINT)	1					
9	5B4–F510H–00	.BOOT SET(DOUBLE OFFSET JOINT)	1					
10	5B4–F510J–00	.DOUBLE OFF SET JOINT	1					
11	5B4–F511G–00	.BOOT BAND (BALL JOINT)	1					
12	3B4–2511H–00	.BOOT BAND(DOUBLE OFFSET JOINT)	1					
13	5B4–F512G–00	.BOOT BAND (SMALL)	1					
14	3B4–2512J–00	.SNAP RING	1					
15	5UG–F512H–00	.CIRCLIP	1					
16	5UG–F510U–00	.BOOT BAND (SMALL)	1					
17	93450–22119	CIRCLIP	1					
18	5UG–F3501–11	STEERING KNUCKLE ASSY (LEFT)	1					
19	93306–006Y4	.BEARING	2					
20	93106–38046	.OIL SEAL	1					
21	93106–38047	.OIL SEAL	1					
22	90387–30008	.COLLAR	1					
23	5FU–F3549–00	.BALL JOINT 1	1					
24	99009–32400	.CIRCLIP	1					
25	5UG–F5111–10	HUB, FRONT	1					
26	90114–10016	BOLT, SERRATION	4					
27	93210–27666	O-RING	1					

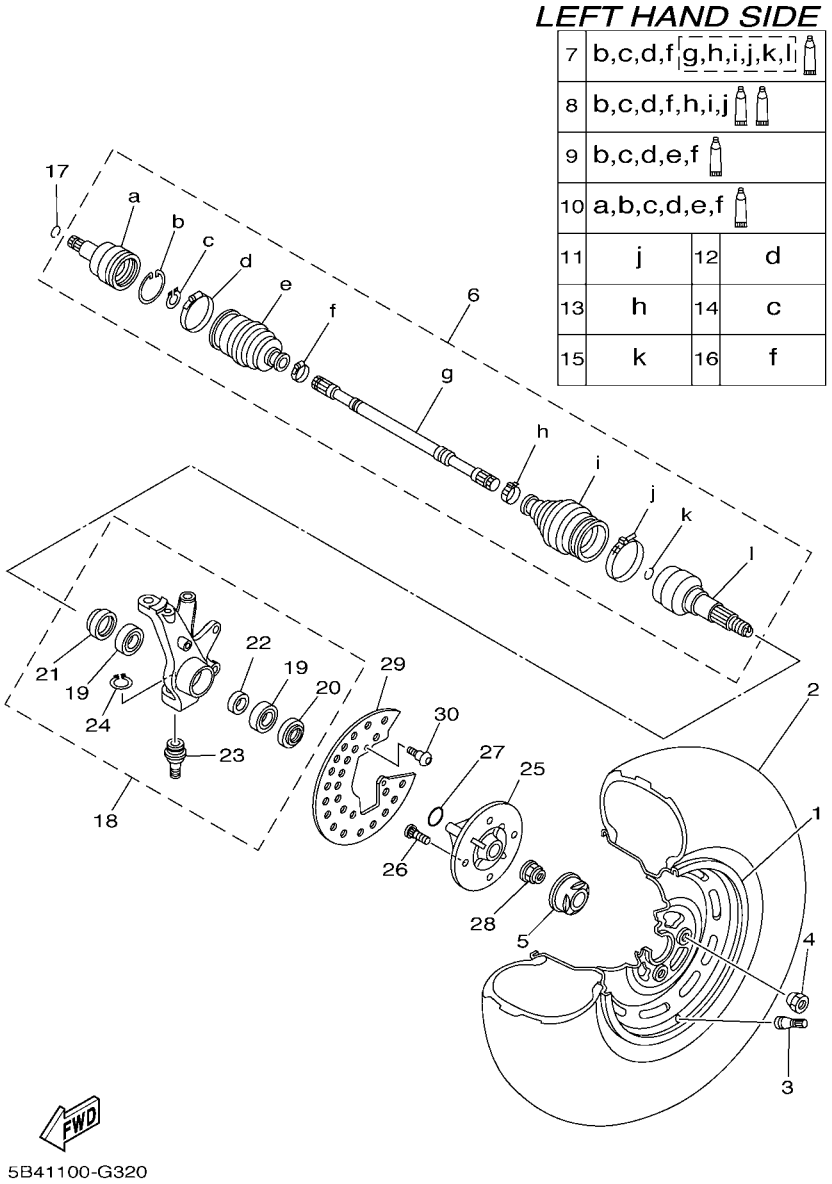

FIG. 32 FRONT WHEEL

REF. NO.	PART NO.	DESCRIPTION	USA					REMARKS
28	90179–24003	NUT	1					
29	5UG–F514A–00	RING, WHEEL 1	1					
30	90149–06280	SCREW	2					

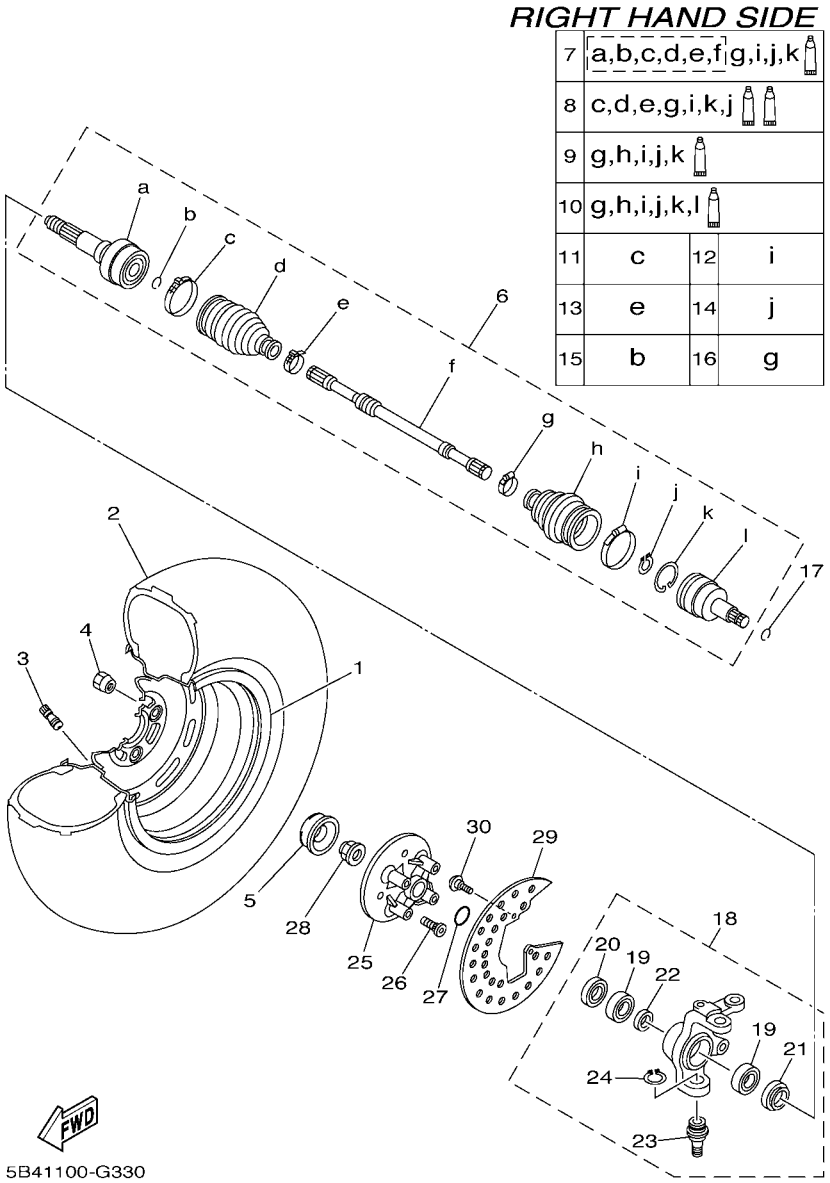

FIG. 33 FRONT WHEEL 2

REF. NO.	PART NO.	DESCRIPTION	USA					REMARKS
1	5UG–F5180–00	WHEEL COMP.	1					
2	94108–12809	TIRE (25X8.00-12 M951Y TL)	1					CHENG SHIN
3	93900–00813	VALVE, RIM (TR413)	1					
4	90179–10022	NUT	4					
5	2P5–F512A–00	CAP, WHEEL	1					
6	5B4–F518F–00	DRIVE SHAFT ASSY	1					
7	5B4–F510F–00	.BALL JOINT SET	1					
8	5B4–F510G–00	.BOOT SET (BALL JOINT)	1					
9	5B4–F510H–00	.BOOT SET(DOUBLE OFFSET JOINT)	1					
10	5B4–F510J–00	.DOUBLE OFF SET JOINT	1					
11	5B4–F511G–00	.BOOT BAND (BALL JOINT)	1					
12	3B4–2511H–00	.BOOT BAND(DOUBLE OFFSET JOINT)	1					
13	5B4–F512G–00	.BOOT BAND (SMALL)	1					
14	3B4–2512J–00	.SNAP RING	1					
15	5UG–F512H–00	.CIRCLIP	1					
16	5UG–F510U–00	.BOOT BAND (SMALL)	1					
17	93450–22119	CIRCLIP	1					
18	5UG–F3502–11	STEERING KNUCKLE ASSY (RIGHT)	1					
19	93306–006Y4	.BEARING	2					
20	93106–38046	.OIL SEAL	1					
21	93106–38047	.OIL SEAL	1					
22	90387–30008	.COLLAR	1					
23	5FU–F3549–00	.BALL JOINT 1	1					
24	99009–32400	.CIRCLIP	1					
25	5UG–F5111–10	HUB, FRONT	1					
26	90114–10016	BOLT, SERRATION	4					
27	93210–27666	O-RING	1					

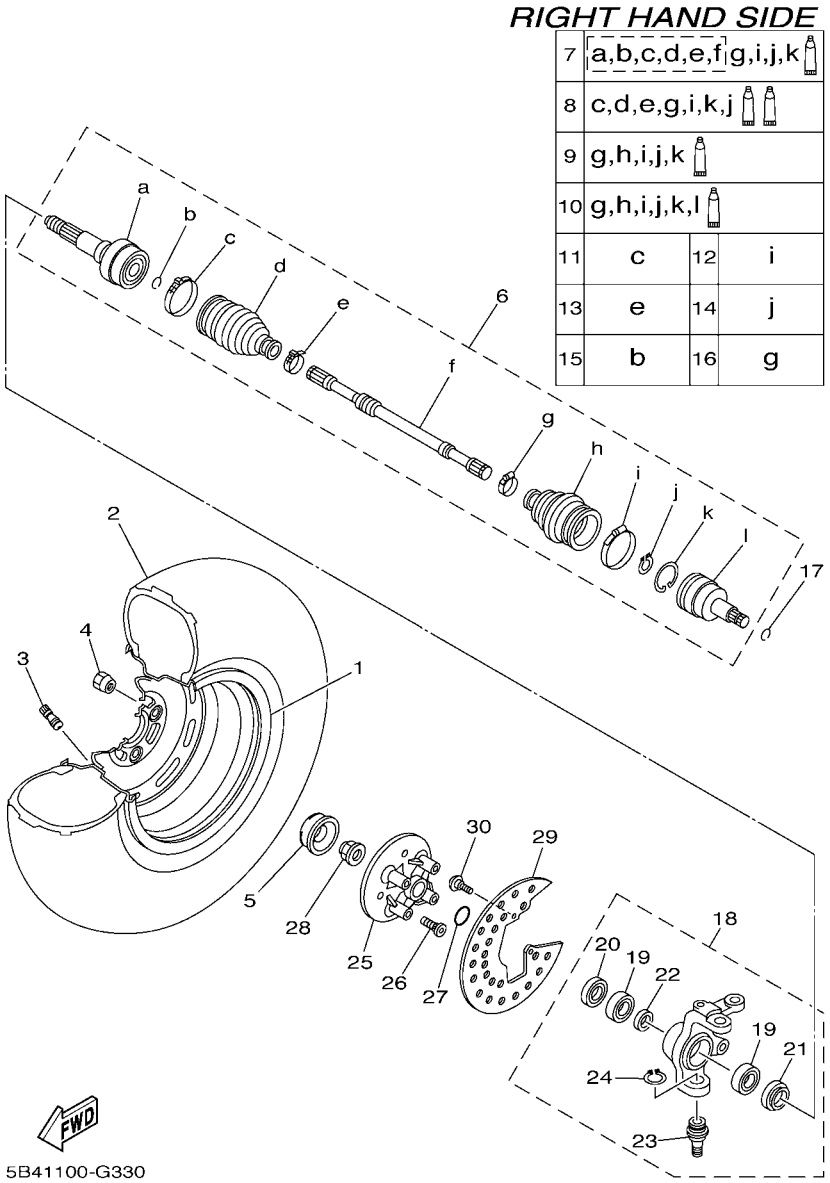

FIG. 33 FRONT WHEEL 2

REF. NO.	PART NO.	DESCRIPTION	USA					REMARKS
28	90179–24003	NUT	1					
29	5UG–F514A–00	RING, WHEEL 1	1					
30	90149–06280	SCREW	2					

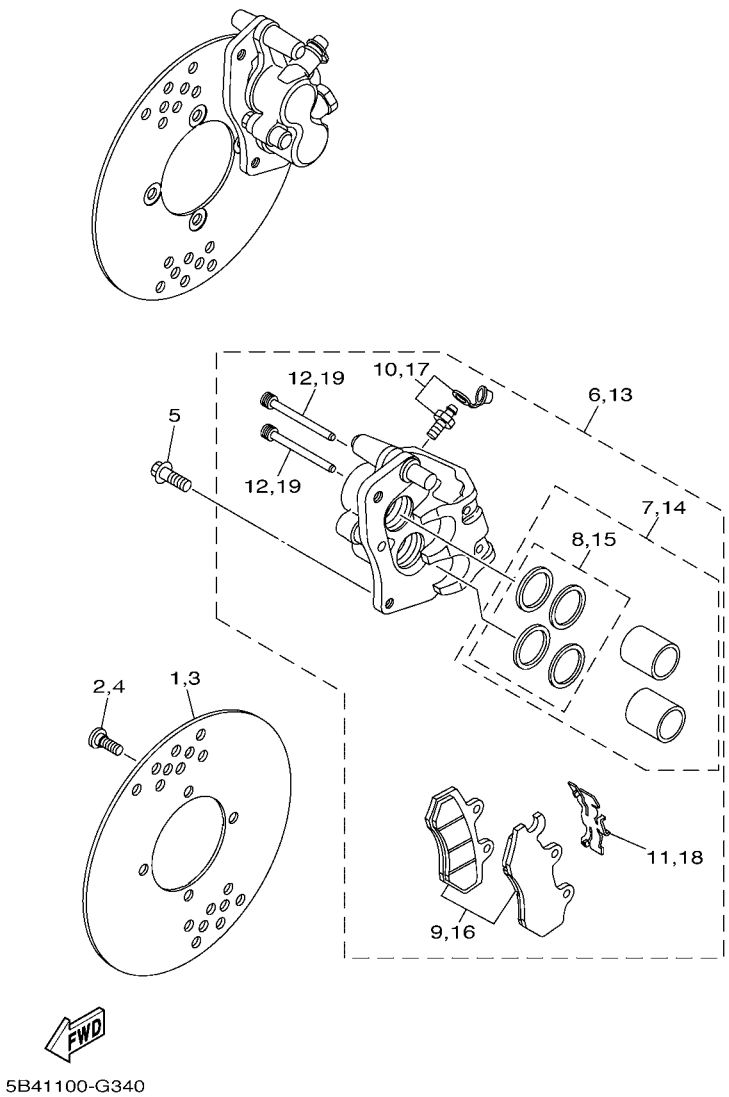

FIG. 34 FRONT BRAKE CALIPER

REF. NO.	PART NO.	DESCRIPTION	USA					REMARKS
1	5B4–F582T–00	DISC, BRAKE (LEFT)	1					
2	90109–08082	BOLT	4					
3	5B4–F582T–00	DISC, BRAKE (LEFT)	1					
4	90109–08082	BOLT	4					
5	90105–10265	BOLT, FLANGE	4					
6	5B4–2580T–00	CALIPER ASSY (LEFT)	1					
7	3LD–W0057–00	.PISTON ASSY, CALIPER	1					
8	3JD–W0047–00	..CALIPER SEAL KIT	1					
9	5B4–W0045–00	.BRAKE PAD KIT	1					
10	1UY–W0048–50	.BLEED SCREW KIT	1					
11	3LD–25934–01	.SPRING, PAD	1					
12	3LD–25924–00	.PIN, PAD	2					
13	5B4–2580U–00	CALIPER ASSY (RIGHT)	1					
14	3LD–W0057–00	.PISTON ASSY, CALIPER	1					
15	3JD–W0047–00	..CALIPER SEAL KIT	1					
16	5B4–W0045–10	.BRAKE PAD KIT	1					
17	1UY–W0048–50	.BLEED SCREW KIT	1					
18	3LD–25934–01	.SPRING, PAD	1					
19	3LD–25924–00	.PIN, PAD	2					

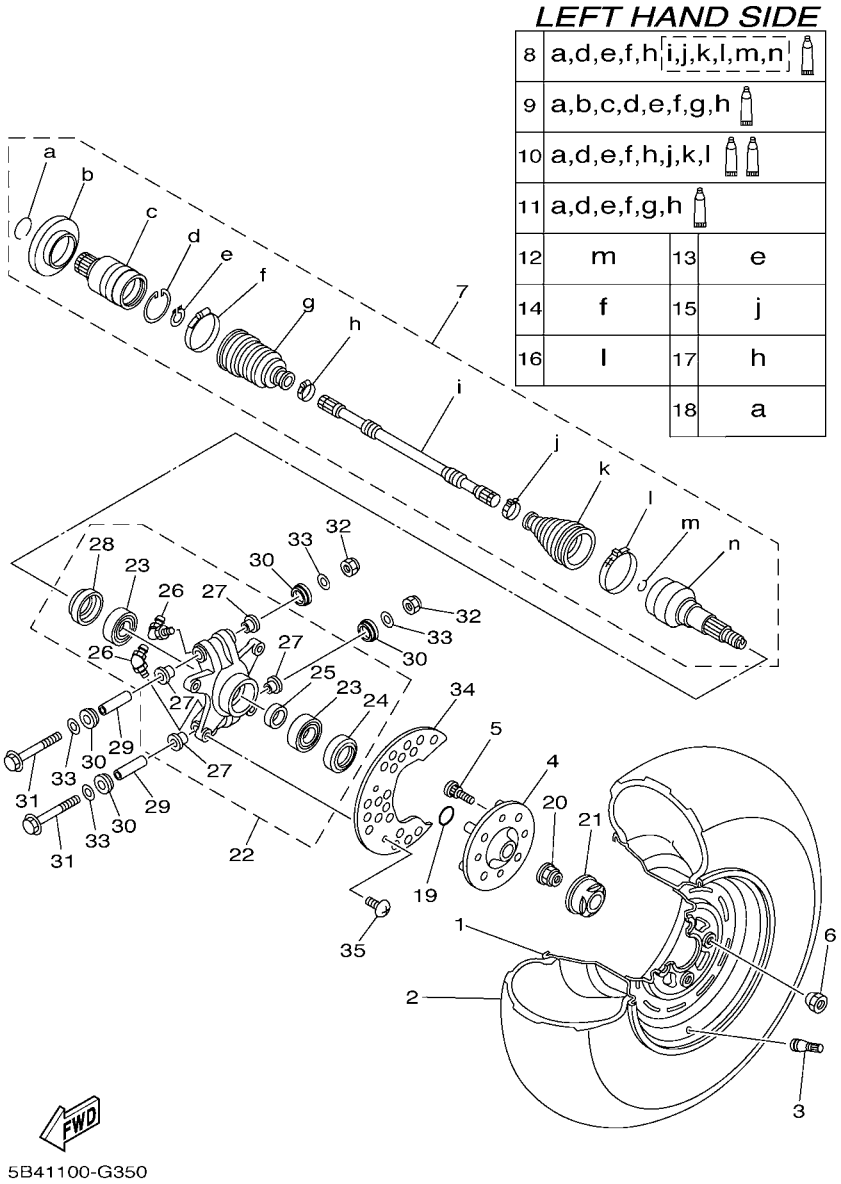

FIG. 35 REAR WHEEL

REF. NO.	PART NO.	DESCRIPTION	USA					REMARKS
1	5UG–F5390–00	REAR WHEEL COMP.	1					
2	94110–12805	TIRE (25X10.00-12 M952Y TL)	1					CHENG SHIN
3	93900–00813	VALVE, RIM (TR413)	1					
4	5B4–F5311–00	HUB, REAR	1					
5	90114–10016	BOLT, SERRATION	4					
6	90179–10022	NUT	4					
7	5B4–F531H–00	REAR DRIVE SHAFT ASSY	1					LH
8	5B4–F530T–00	.BALL JOINT SET	1					LH
9	5UG–F530V–02	.DOUBLE OFF SET JOINT	1					LH
10	5B4–F530X–00	.BOOT SET (BALL JOINT)	1					
11	5UG–F530Y–01	.BOOT SET(DOUBLE OFFSET JOINT)	1					
12	5UG–F512H–00	.CIRCLIP	1					
13	5UG–F512J–00	.SNAP RING	1					
14	5UG–F511H–00	.BOOT BAND(DOUBLE OFFSETJOINT)	1					
15	5B4–F512G–00	.BOOT BAND (SMALL)	1					
16	5B4–F511G–00	.BOOT BAND (BALL JOINT)	1					
17	5UG–F510U–00	.BOOT BAND (SMALL)	1					
18	5KM–2536E–10	.CLIP, SPRING	1					
19	93210–27666	O-RING	1					
20	90179–24003	NUT	1					
21	2P5–F512A–00	CAP, WHEEL	1					
22	5B4–F530F–00	REAR KNUCKLE ASSY	1					
23	93306–206Y2	.BEARING	2					
24	93106–42800	.OIL SEAL	1					
25	90387–30008	.COLLAR	1					
26	5B4–R169A–00	.NIPPLE, GREASE	2					
27	90381–17067	.BUSH, SOLID	4					

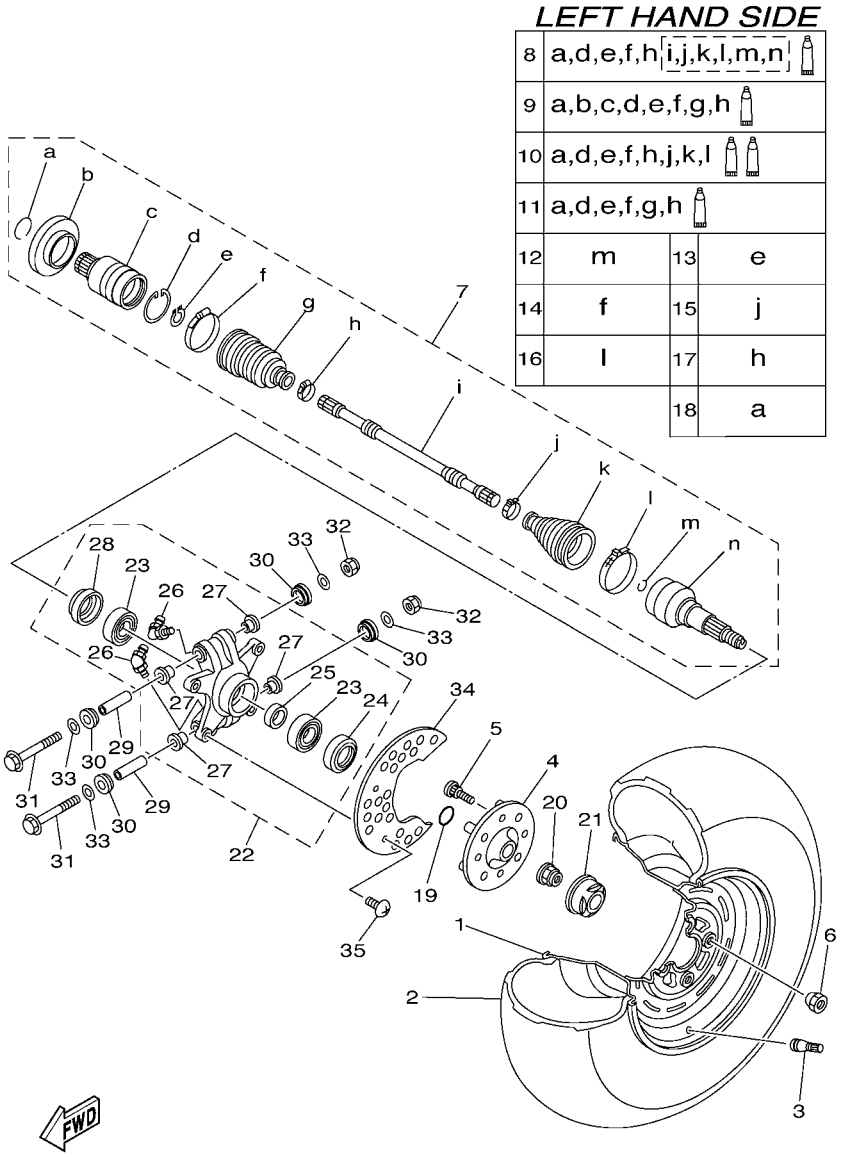

FIG. 35 REAR WHEEL

REF. NO.	PART NO.	DESCRIPTION	USA					REMARKS
28	93106–38800	.OIL SEAL	1					
29	5KM–23448–00	SPACER	2					
30	5UG–23517–10	COVER, THRUST 1	4					
31	90105–10277	BOLT, FLANGE	2					
32	90185–10012	NUT, SELF-LOCKING	2					
33	90201–10035	WASHER, PLATE	4					
34	5B4–F5718–10	PROTECTOR, DISK BRAKE	1					
35	90150–06021	SCREW, ROUND HEAD	2					

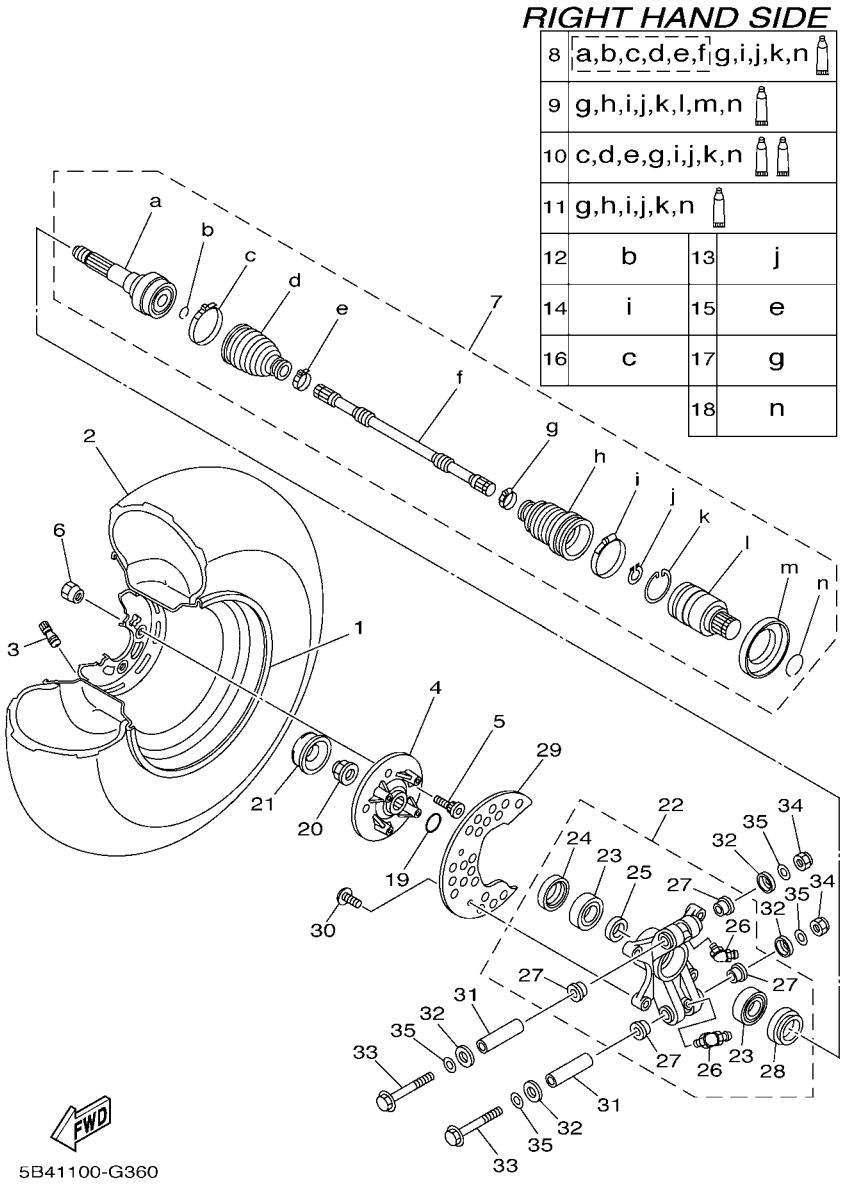

FIG. 36 REAR WHEEL 2

REF. NO.	PART NO.	DESCRIPTION	USA					REMARKS
1	5UG–F5390–00	REAR WHEEL COMP.	1					
2	94110–12805	TIRE (25X10.00-12 M952Y TL)	1					CHENG SHIN
3	93900–00813	VALVE, RIM (TR413)	1					
4	5B4–F5311–00	HUB, REAR	1					
5	90114–10016	BOLT, SERRATION	4					
6	90179–10022	NUT	4					
7	5B4–F53B0–00	SHAFT, REAR DRIVE	1					RH
8	5B4–F530U–00	.BALL JOINT SET	1					RH
9	5UG–F530W–02	.DOUBLE OFF SET JOINT	1					RH
10	5B4–F530X–00	.BOOT SET (BALL JOINT)	1					
11	5UG–F530Y–01	.BOOT SET(DOUBLE OFFSET JOINT)	1					
12	5UG–F512H–00	.CIRCLIP	1					
13	5UG–F512J–00	.SNAP RING	1					
14	5UG–F511H–00	.BOOT BAND(DOUBLE OFFSETJOINT)	1					
15	5B4–F512G–00	.BOOT BAND (SMALL)	1					
16	5B4–F511G–00	.BOOT BAND (BALL JOINT)	1					
17	5UG–F510U–00	.BOOT BAND (SMALL)	1					
18	5KM–2536E–10	.CLIP, SPRING	1					
19	93210–27666	O-RING	1					
20	90179–24003	NUT	1					
21	2P5–F512A–00	CAP, WHEEL	1					
22	5B4–F532F–00	REAR KNUCKLE ASSY.,2	1					
23	93306–206Y2	.BEARING	2					
24	93106–42800	.OIL SEAL	1					
25	90387–30008	.COLLAR	1					
26	5B4–R169A–00	.NIPPLE, GREASE	2					
27	90381–17067	.BUSH, SOLID	4					

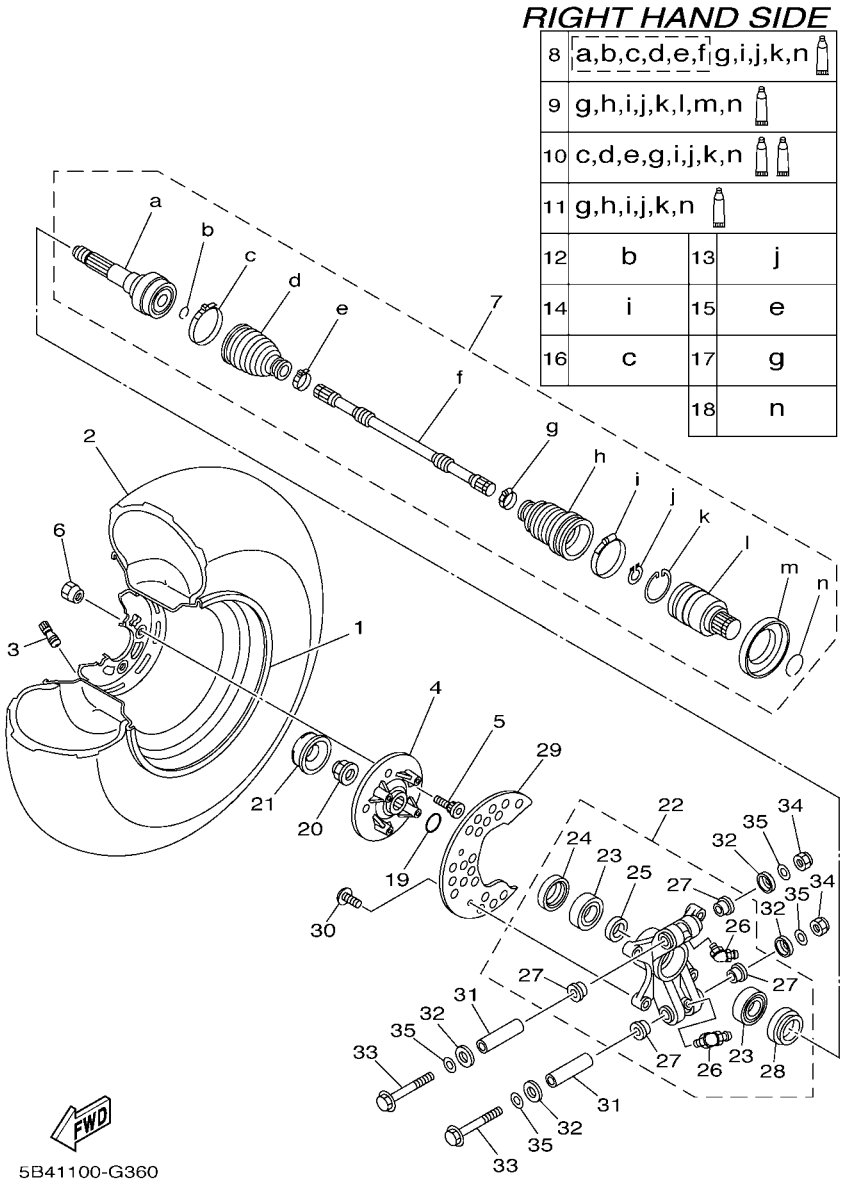

FIG. 36 REAR WHEEL 2

REF. NO.	PART NO.	DESCRIPTION	USA					REMARKS
28	93106–38800	.OIL SEAL	1					
29	5B4–F5718–10	PROTECTOR, DISK BRAKE	1					
30	90150–06021	SCREW, ROUND HEAD	2					
31	5KM–23448–00	SPACER	2					
32	5UG–23517–10	COVER, THRUST 1	4					
33	90105–10277	BOLT, FLANGE	2					
34	90185–10012	NUT, SELF-LOCKING	2					
35	90201–10035	WASHER, PLATE	4					

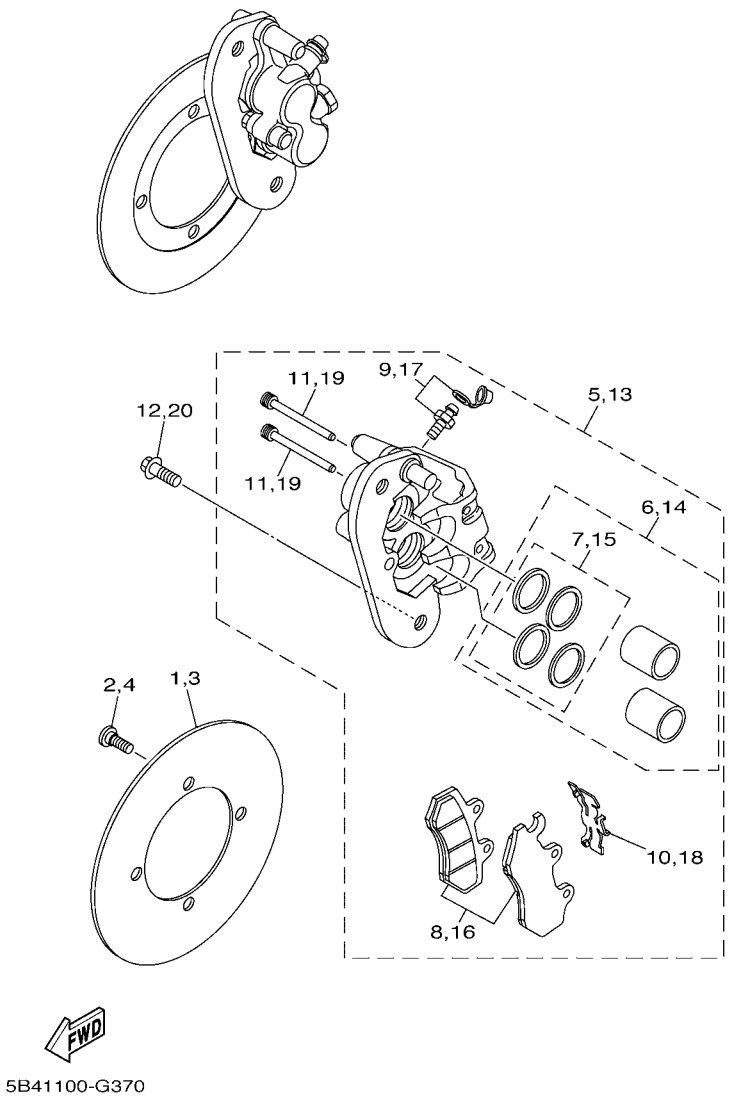

FIG. 37 REAR BRAKE CALIPER

REF. NO.	PART NO.	DESCRIPTION	USA					REMARKS
1	5B4–F5831–00	DISC, BRAKE (RIGHT)	1					
2	90109–08082	BOLT	4					
3	5B4–F5831–00	DISC, BRAKE (RIGHT)	1					
4	90109–08082	BOLT	4					
5	5B4–2580V–00	CALIPER ASSY, REAR 1	1					
6	5B4–W0057–00	.PISTON ASSY, CALIPER	1					
7	3LC–W0047–50	..CALIPER SEAL KIT	1					
8	5B4–W0045–00	.BRAKE PAD KIT	1					
9	1UY–W0048–50	.BLEED SCREW KIT	1					
10	3LD–25934–01	.SPRING, PAD	1					
11	3LD–25924–00	.PIN, PAD	2					
12	90105–10265	BOLT, FLANGE	2					
13	5B4–2580W–00	CALIPER ASSY, REAR 2	1					
14	5B4–W0057–00	.PISTON ASSY, CALIPER	1					
15	3LC–W0047–50	..CALIPER SEAL KIT	1					
16	5B4–W0045–10	.BRAKE PAD KIT	1					
17	1UY–W0048–50	.BLEED SCREW KIT	1					
18	3LD–25934–01	.SPRING, PAD	1					
19	3LD–25924–00	.PIN, PAD	2					
20	90105–10265	BOLT, FLANGE	2					

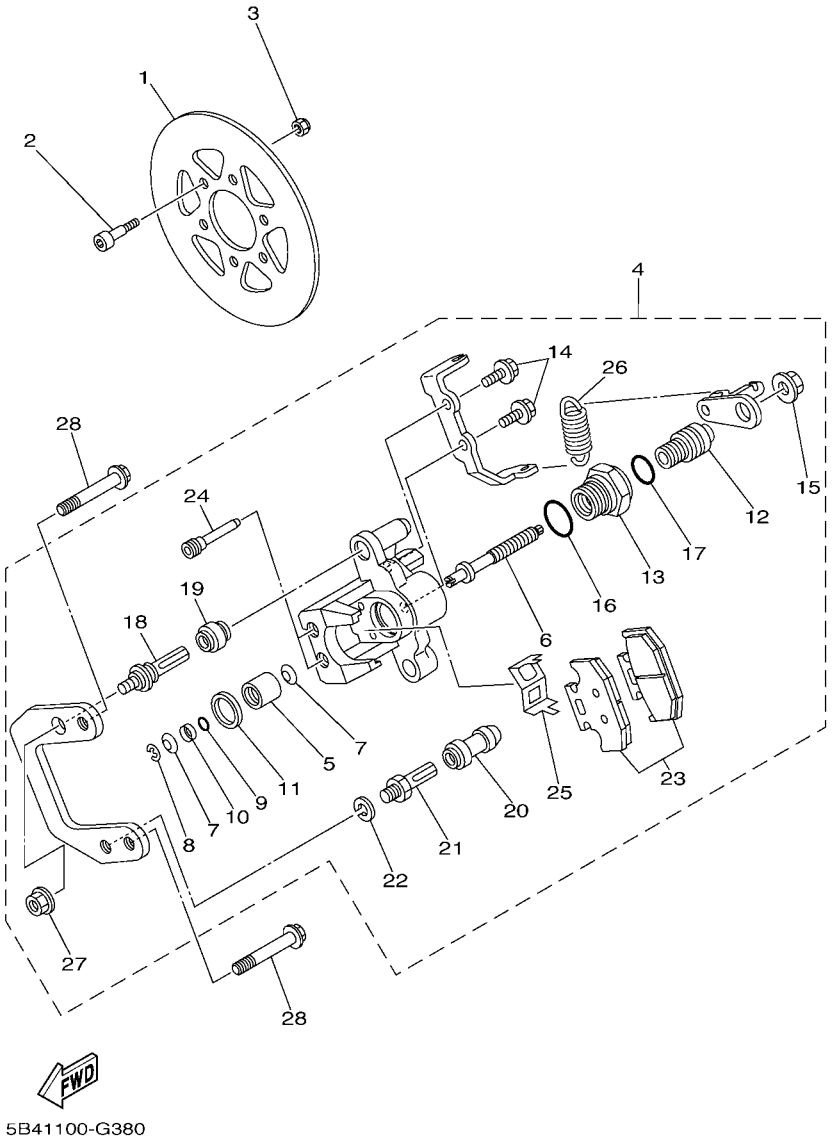

FIG. 38 REAR BRAKE CALIPER 2

REF. NO.	PART NO.	DESCRIPTION	USA					REMARKS
1	5B4–F5711–00	DISC, BRAKE	1					
2	90110–06228	BOLT, HEXAGON SOCKET HEAD	6					
3	95612–06100	NUT, U	6					
4	5B4–25905–00	PARKING BRAKE ASSY	1					
5	5B4–25814–10	.PISTON, CALIPER	1					
6	5B4–25880–00	.PUSH ROD COMP.	1					
7	5B4–2581R–00	.WASHER, CONICAL SPRING	2					
8	5B4–25415–00	.CIRCLIP	1					
9	5B4–25976–00	.O-RING	1					
10	5B4–25913–00	.RETAINER	1					
11	5B4–25975–00	.RUBBER, BUSHING	1					
12	5B4–25978–00	.SHAFT L	1					
13	5B4–25973–00	.NUT	1					
14	5B4–25833–00	.BOLT, FITTING	2					
15	1UY–25973–51	.NUT	1					
16	5B4–25976–10	.O-RING	1					
17	5B4–25976–20	.O-RING	1					
18	3JD–25926–00	.BOLT	1					
19	3JD–25917–00	.BOOT, CALIPER	1					
20	1UY–25937–51	.BOOT 2	1					
21	1UY–25926–51	.BOLT	1					
22	1UY–25938–51	.WASHER, SPRING	1					
23	5B4–W0046–00	.BRAKE PAD KIT 2	1					
24	5B4–25924–00	.PIN, PAD	2					
25	5B4–25919–00	.SUPPORT, PAD	1					
26	5B4–25977–00	.SPRING, RETURN	1					
27	5B4–2585F–00	.NUT	1					

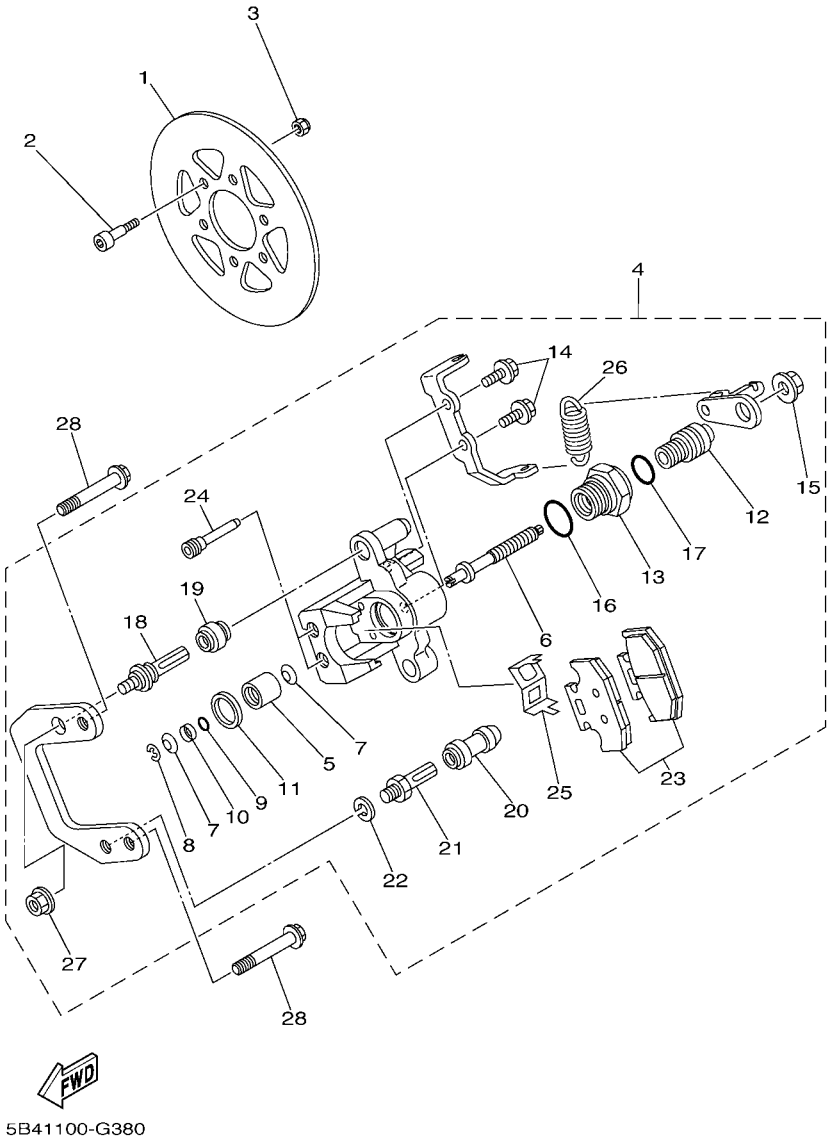

FIG. 38 REAR BRAKE CALIPER 2

REF. NO.	PART NO.	DESCRIPTION	USA					REMARKS
28	90105–10402	BOLT, FLANGE	2					

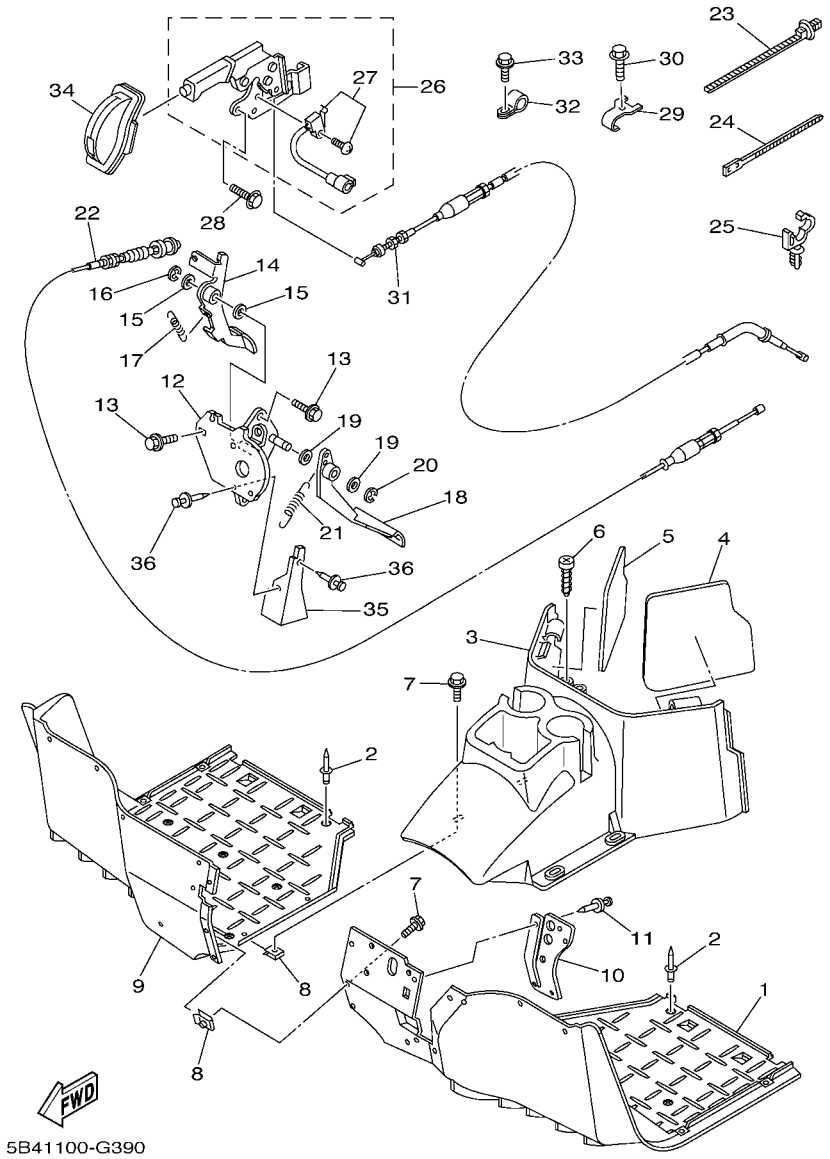

FIG. 39 STAND & FOOTREST

REF. NO.	PART NO.	DESCRIPTION	USA					REMARKS
1	5UG–F7411–10	FOOTREST 1	1					
2	90267–48820	RIVET, BLIND	22					
3	5B4–F7413–00	COVER, FOOTREST	1					
4	5B4–F8238–00	SEAL 3	1					
5	5B4–F8268–00	SEAL 4	1					
6	90167–06800	SCREW, TAPPING	2					
7	90119–05023	BOLT, WITH WASHER	7					
8	90183–051A1	NUT, SPRING	7					
9	5UG–F7421–10	FOOTREST 2	1					
10	5UG–F7286–00	COVER, DUST	1					
11	90269–06800	RIVET	4					
12	5UG–F2548–01	BRACKET, PEDAL SUPPORT	1					
13	95812–08020	BOLT, FLANGE	3					
14	5B4–F7801–00	ACCEL PEDAL ASSY	1					
15	90201–15018	WASHER, PLATE	2					
16	93430–12008	CIRCLIP	1					
17	90506–20192	SPRING, TENSION	1					
18	5UG–F7200–00	PEDAL, BRAKE	1					
19	90201–15018	WASHER, PLATE	2					
20	93430–12008	CIRCLIP	1					
21	90506–20192	SPRING, TENSION	1					
22	5B4–26311–00	CABLE, THROTTLE 1	1					
23	90464–20005	CLAMP	2					
24	90464–40825	CLAMP	1					
25	90464–12830	CLAMP	1					
26	5B4–F5690–00	PARKING LEVER ASSY	1					
27	5UG–H251S–00	.SWITCH COMP.	1					

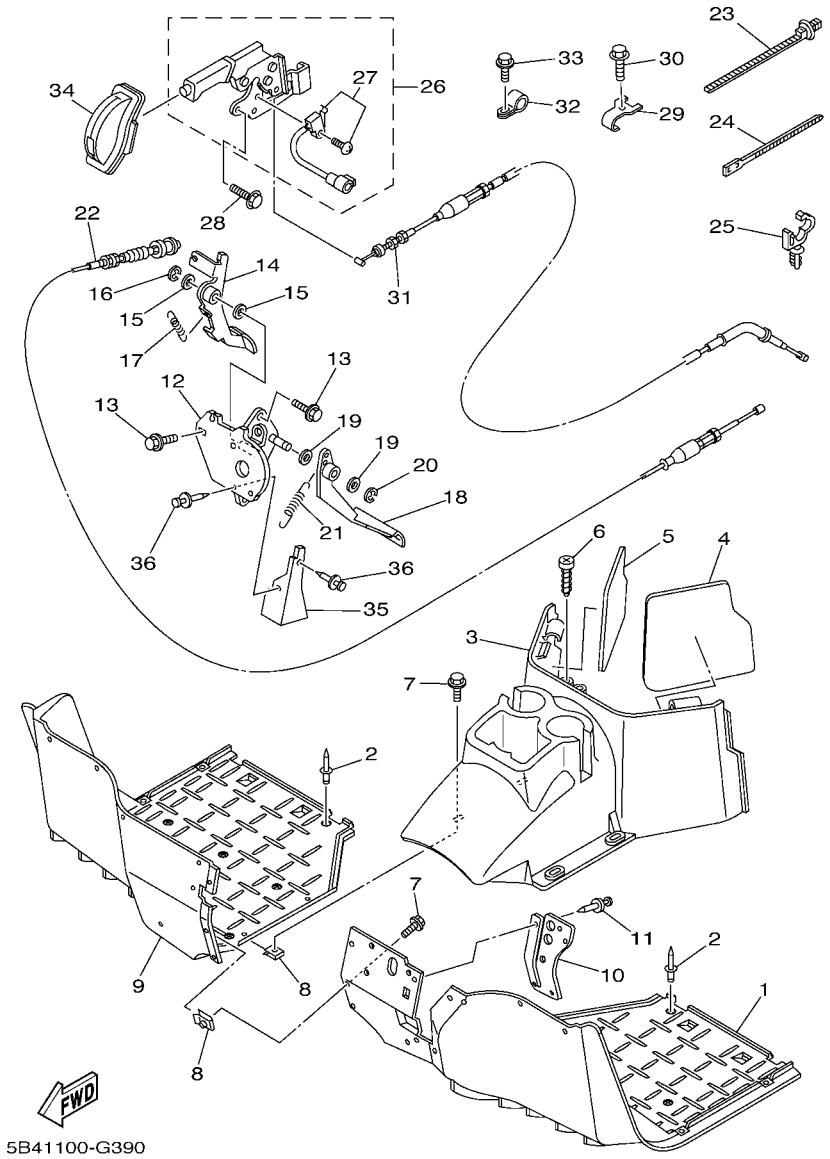

FIG. 39 STAND & FOOTREST

REF. NO.	PART NO.	DESCRIPTION	USA					REMARKS
28	95812–06014	BOLT, FLANGE	2					
29	5ND–F5875–01	HOLDER, BRAKE HOSE 1	2					
30	95822–06012	BOLT, FLANGE	2					
31	5B4–26341–00	WIRE, BRAKE 1	1					
32	90461–08802	CLAMP	1					
33	90105–06831	BOLT, FLANGE	1					
34	5B4–F6372–00	COVER, HANDLE LEVER 1	1					
35	5UG–G5158–10	PLATE, SPLASH	1					
36	90269–06800	RIVET	2					

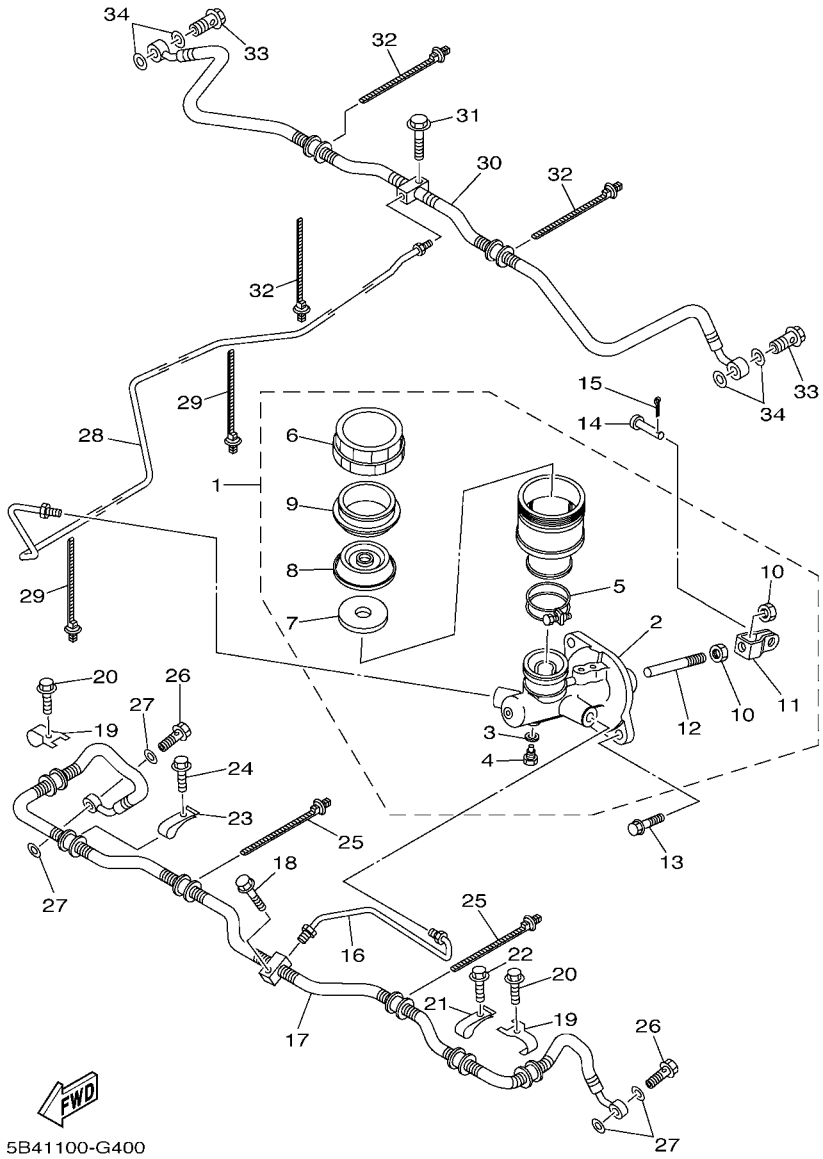

FIG. 40 REAR MASTER CYLINDER

REF. NO.	PART NO.	DESCRIPTION	USA					REMARKS
1	5B4–2583T–00	MASTER CYLINDER ASSY	1					
2	5UG–W0042–00	.CYLINDER KIT, MASTER	1					
3	5UG–25878–00	.WASHER, OIL BOLT	1					
4	5UG–25877–00	.BOLT, OIL 1	1					
5	5UG–25719–00	.BAND	1					
6	5UG–25852–00	.CAP, RESERVOIR	1					
7	5UG–25853–00	.FLOAT, RESERVOIR	1					
8	5UG–25854–00	.GASKET, DIAPHRAGM	1					
9	5UG–25855–00	.BUSH,DIAPHRAGM	1					
10	4SS–27218–00	.NUT	2					
11	2YK–27222–00	.JOINT	1					
12	5UG–25880–00	.PUSH ROD COMP.	1					
13	90105–08129	BOLT, FLANGE	2					
14	90240–08005	PIN, CLEVIS	1					
15	91402–20020	PIN, COTTER	1					
16	5B4–F5882–01	PIPE, BRAKE 2	1					
17	5B4–F5872–00	HOSE, BRAKE 1	1					
18	90105–06833	BOLT, FLANGE	1					
19	5ND–F5875–01	HOLDER, BRAKE HOSE 1	2					
20	95822–06012	BOLT, FLANGE	2					
21	5UG–F3192–01	BAND	2					
22	95822–06016	BOLT, FLANGE	2					
23	5UG–F3192–01	BAND	1					
24	95822–06016	BOLT, FLANGE	1					
25	90464–20005	CLAMP	2					
26	90401–10015	BOLT, UNION	2					
27	90201–10118	WASHER, PLATE	4					

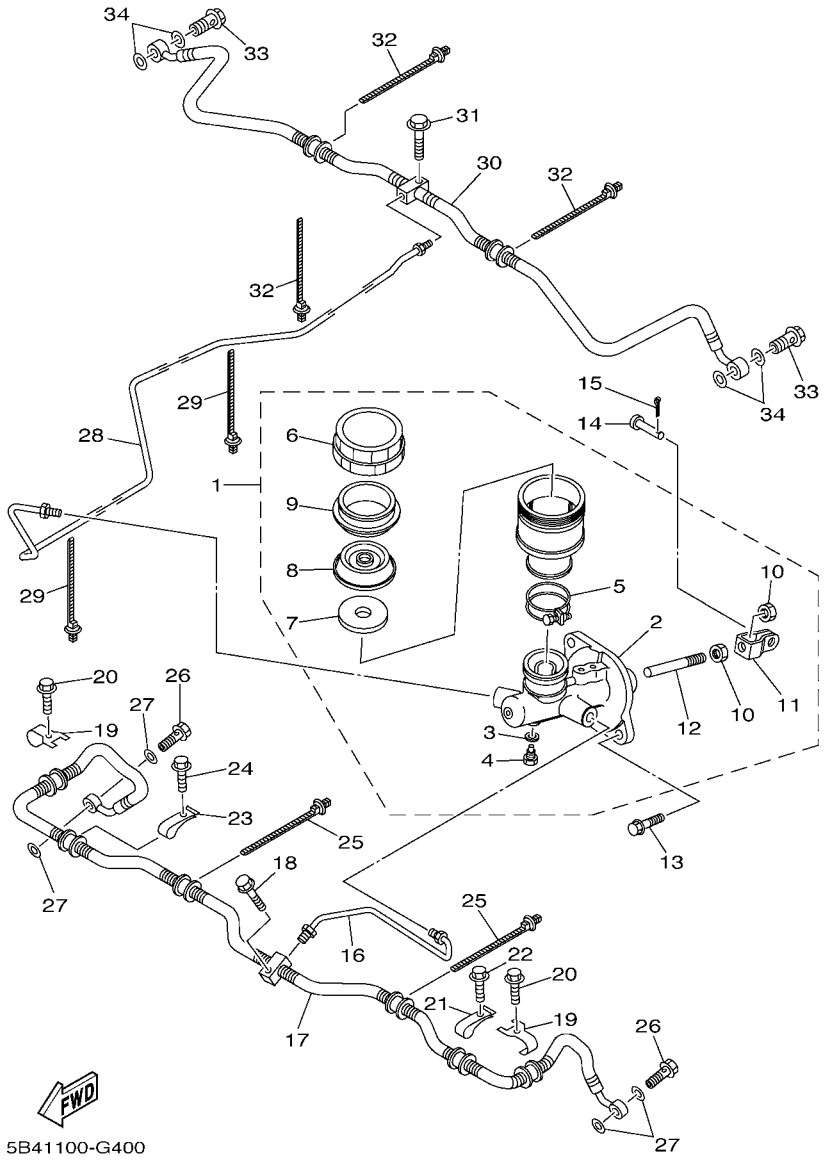

FIG. 40 REAR MASTER CYLINDER

REF. NO.	PART NO.	DESCRIPTION	USA					REMARKS
28	5B4–F5871–00	PIPE, BRAKE	1					
29	90464–20005	CLAMP	2					
30	5B4–F5873–00	HOSE, BRAKE 2	1					
31	90105–06833	BOLT, FLANGE	2					
32	90464–20005	CLAMP	3					
33	90401–10015	BOLT, UNION	2					
34	90201–10118	WASHER, PLATE	4					

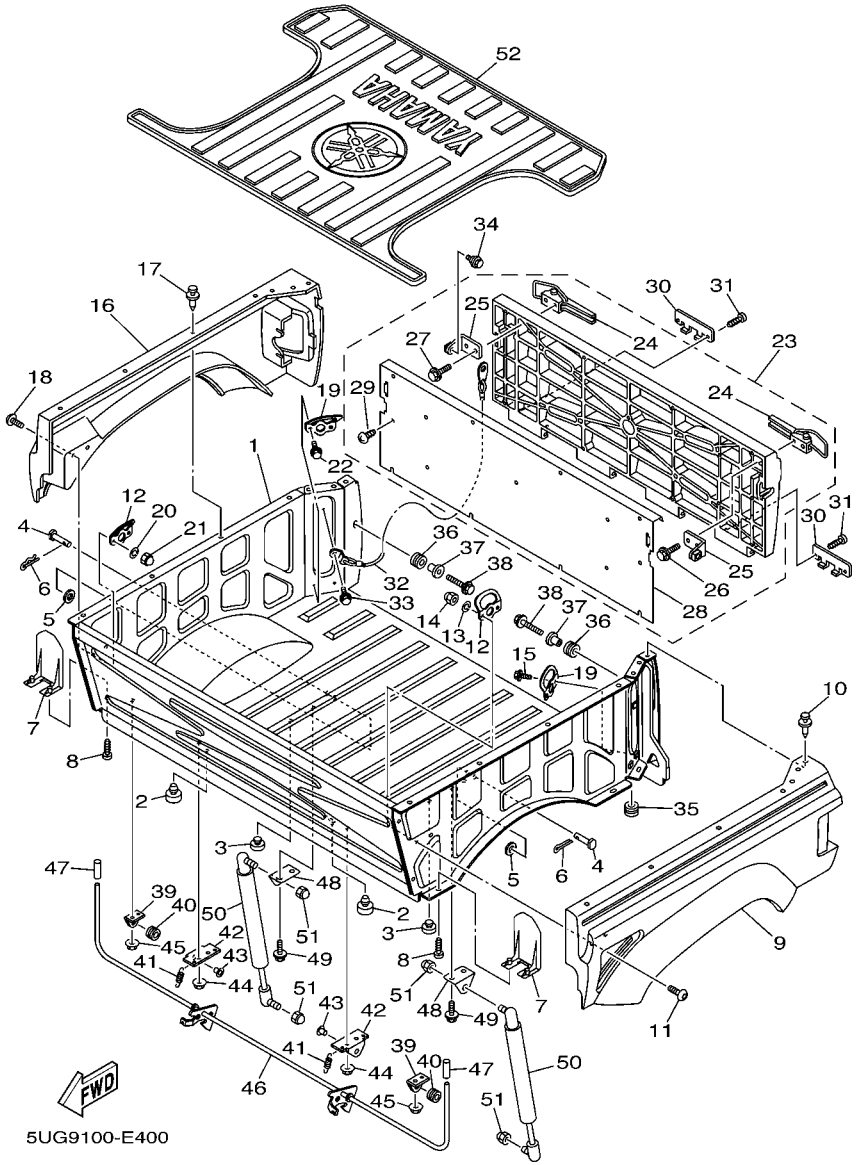

FIG. 41 CARRIER

REF. NO.	PART NO.	DESCRIPTION	USA					REMARKS
1	2P5–F4850–02	CARRIER BOX ASSY	1					
2	4X4–27114–00	STOPPER, MAIN STAND	2					
3	128–27114–00	STOPPER, MAIN STAND	2					
4	90240–12002	PIN, CLEVIS	2					
5	90201–12049	WASHER, PLATE	2					
6	91402–30025	PIN, COTTER	2					
7	2P5–F6123–00	GUARD, LEVER	2					
8	90167–06800	SCREW, TAPPING	2					
9	5UG–K8193–D0	PANEL, REAR FENDER 3	1					
10	90269–06800	RIVET	8					
11	90110–06200	BOLT, HEXAGON SOCKET HEAD	2					
12	5UG–F4867–00	HOOK	2					
13	92902–06100	WASHER, SPRING	2					
14	95307–06800	NUT	2					
15	95817–06016	BOLT, FLANGE	2					
16	5UG–K8194–D0	PANEL, REAR FENDER 4	1					
17	90269–06800	RIVET	8					
18	90110–06200	BOLT, HEXAGON SOCKET HEAD	2					
19	5UG–F4867–00	HOOK	2					
20	92902–06100	WASHER, SPRING	2					
21	95307–06800	NUT	2					
22	95817–06016	BOLT, FLANGE	2					
23	5UG–K810N–20	REAR STORAGE LID COMP.	1					
24	5UG–F389E–00	.LATCH	2					
25	5UG–F849R–00	.BRACKET,TRANK STOPPER	2					
26	95822–06025	.BOLT, FLANGE	2					
27	95822–06025	.BOLT, FLANGE	2					

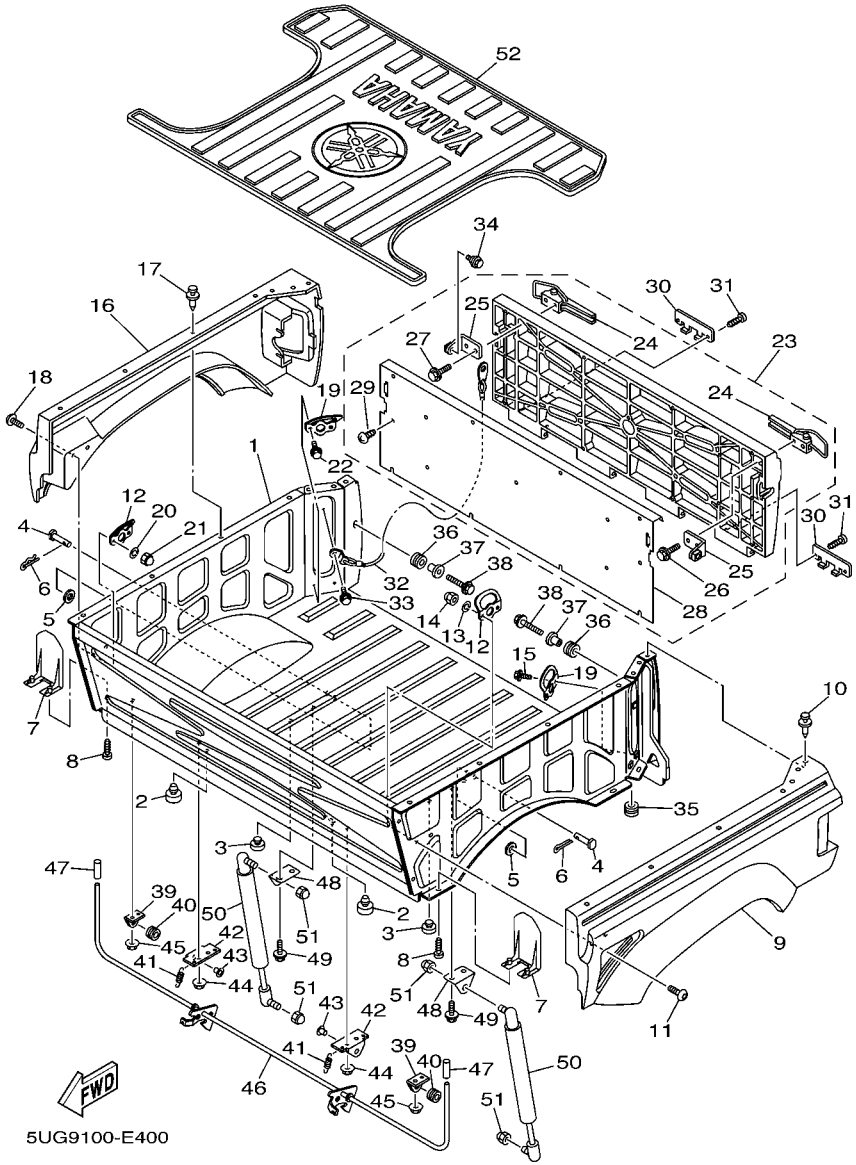

FIG. 41 CARRIER

REF. NO.	PART NO.	DESCRIPTION	USA					REMARKS
28	5UG–K8365–00	.CASE	1					
29	90167–05030	.SCREW, TAPPING	15					
30	5UG–F4669–00	COVER, HINGE	2					
31	90167–05025	SCREW, TAPPING	4					
32	5UG–K7195–01	HOLDER, CABLE	2					
33	95817–06016	BOLT, FLANGE	2					
34	90109–060F3	BOLT	2					
35	90480–15235	GROMMET	2					
36	90480–18290	GROMMET	2					
37	90387–066J1	COLLAR	2					
38	95822–06025	BOLT, FLANGE	2					
39	2P5–K7175–00	HOLDER, LATCH	2					
40	90480–15235	GROMMET	2					
41	90506–16451	SPRING, TENSION	2					
42	2P5–K7185–00	PLATE 1	2					
43	2P5–K7515–00	BUSH, RUBBER 1	2					
44	95702–08500	NUT, WITH WASHER	4					
45	95702–06500	NUT, WITH WASHER	2					
46	2P5–K7180–00	LATCH ASSY	1					
47	5UG–K818M–00	CAP, PROTECTOR END 4	2					
48	5UG–F1798–11	BRACKET, DAMPER	2					
49	90105–06831	BOLT, FLANGE	4					
50	5UG–F8415–00	DAMPER 1	2					
51	95602–08200	NUT, SELF-LOCKING	4					
52	5UG–F483J–00	MAT	1					

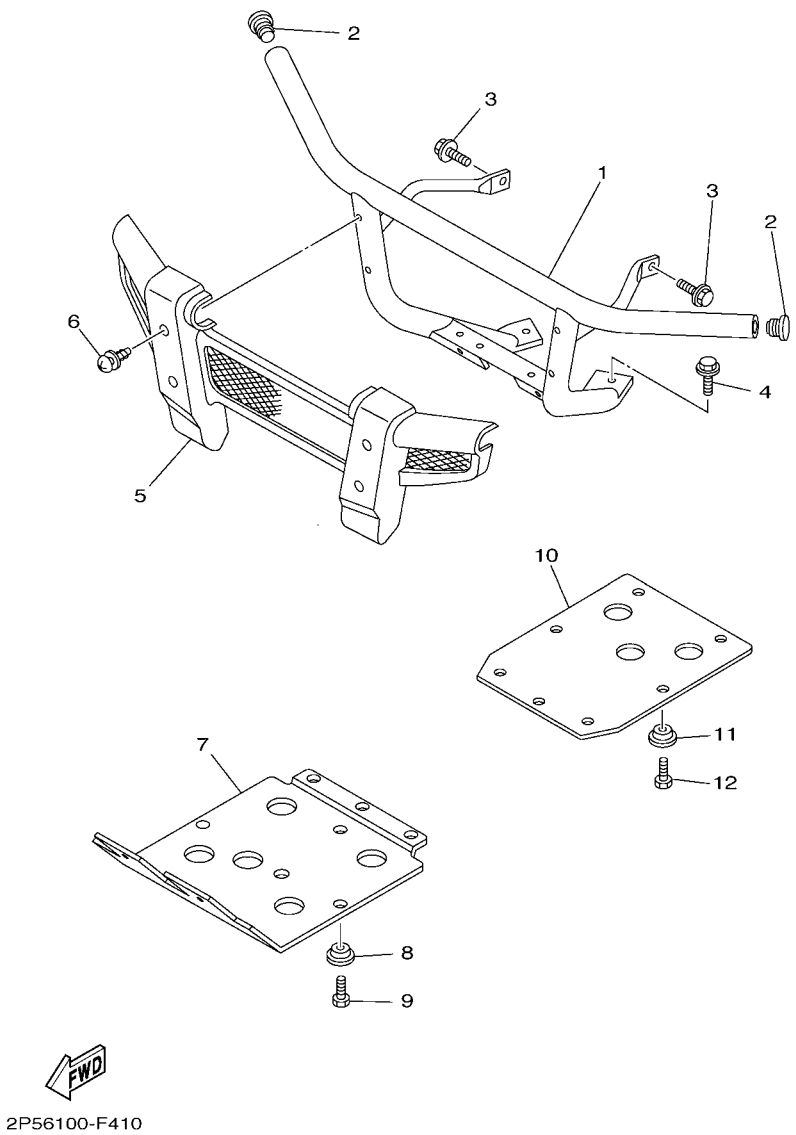

FIG. 42 GUARD

REF. NO.	PART NO.	DESCRIPTION	USA					REMARKS
1	2P5–F845N–20	BAR, CARRY FRONT	1					
2	5UG–F2417–00	PLUG	2					
3	95812–10020	BOLT, FLANGE	2					
4	95812–12025	BOLT, FLANGE	2					
5	5UG–F842A–00	COVER 5	1					
6	90119–06868	BOLT, WITH WASHER	4					
7	2P5–F8385–01	COVER, LOWER	1					
8	5UG–F8329–01	SPACER	7					
9	90105–06832	BOLT, FLANGE	7					
10	5UG–F8395–01	COVER, UNDER	1					
11	5UG–F8329–01	SPACER	7					
12	90105–06832	BOLT, FLANGE	7					

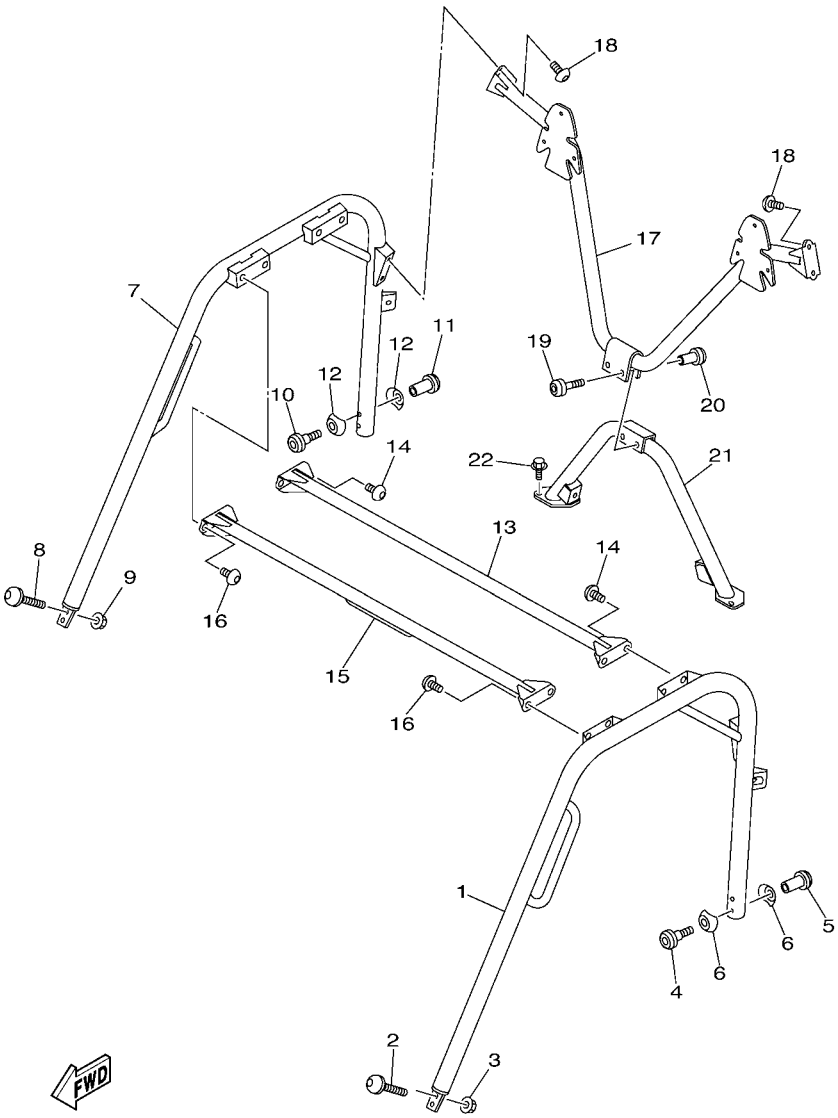

2P5A100-G420

FIG. 43 GUARD 2

REF. NO.	PART NO.	DESCRIPTION	USA					REMARKS
1	5UG–K831A–51	SUPPORT, ROOF 3	1					
2	90111–10803	BOLT,HEX. SOCKET BUTTON	2					
3	95602–10200	NUT, U FLANGE	2					
4	5UG–K7519–00	BOLT	1					
5	5UG–K7573–00	NUT, SPECIAL	1					
6	5UG–K7526–00	WASHER 2	2					
7	5UG–K831E–51	SUPPORT, ROOF 4	1					
8	90111–10803	BOLT,HEX. SOCKET BUTTON	2					
9	95602–10200	NUT, U FLANGE	2					
10	5UG–K7519–00	BOLT	1					
11	5UG–K7573–00	NUT, SPECIAL	1					
12	5UG–K7526–00	WASHER 2	2					
13	5UG–K8392–20	MEMBER, ROOF FRAME	1					
14	90111–10802	BOLT,HEX. SOCKET BUTTON	4					
15	5UG–K8336–20	MEMBER, CROSS ROOF	1					
16	90111–10802	BOLT,HEX. SOCKET BUTTON	4					
17	5UG–K830A–51	ROOF SUPPORT ASSY 1	1					
18	90111–10802	BOLT,HEX. SOCKET BUTTON	4					
19	5UG–K7519–00	BOLT	2					
20	5UG–K7573–00	NUT, SPECIAL	2					
21	5UG–K830B–51	ROOF SUPPORT ASSY 2	1					
22	95812–10016	BOLT, FLANGE	4					

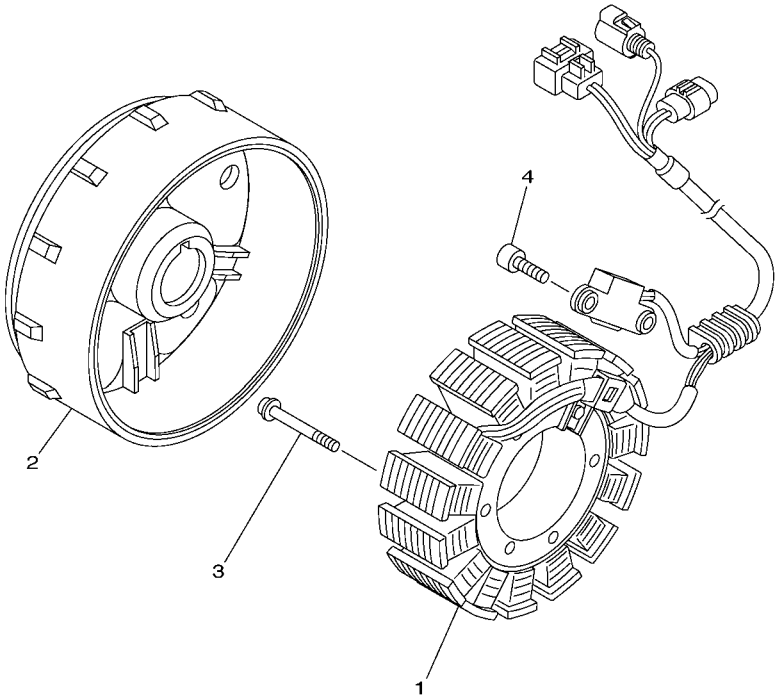

5B41100-G440

FIG. 44 GENERATOR

REF. NO.	PART NO.	DESCRIPTION	USA					REMARKS
1	5B4–81410–00	STATOR ASSY	1					
2	3B4–81450–00	ROTOR ASSY	1					
3	92012–06030	BOLT, BUTTON HEAD	3					
4	90110–05031	BOLT, HEXAGON SOCKET HEAD	2					

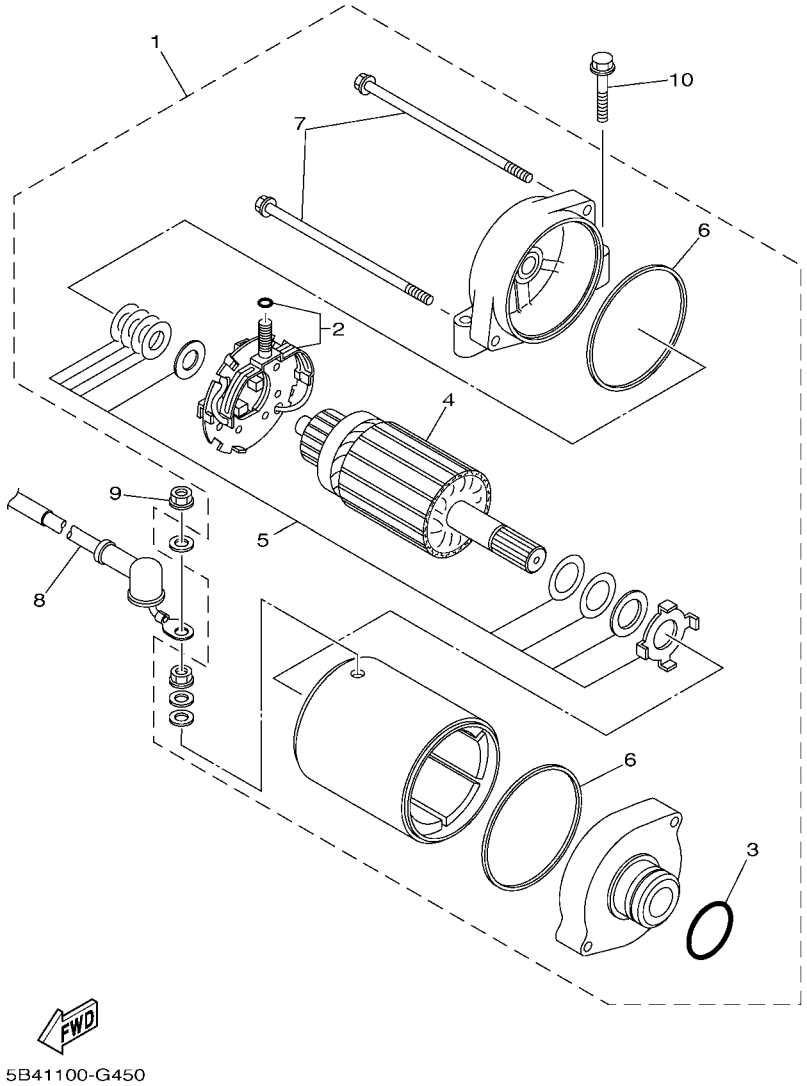

FIG. 45 STARTING MOTOR

REF. NO.	PART NO.	DESCRIPTION	USA					REMARKS
1	1S3–81890–00	MOTOR ASSY	1					
2	3AJ–81801–00	.BRUSH SET	1					
3	1FK–81847–00	.O-RING	1					
4	4NK–81850–00	.ARMATURE ASSY	1					
5	3KS–81809–00	.WASHER KIT	1					
6	11H–81844–00	.GASKET	2					
7	3AJ–81826–00	.BOLT	2					
8	5UG–H1815–02	CORD, STARTER MOTOR	1					
9	4XV–8182A–00	NUT	1					
10	95022–06030	BOLT, FLANGE	2					

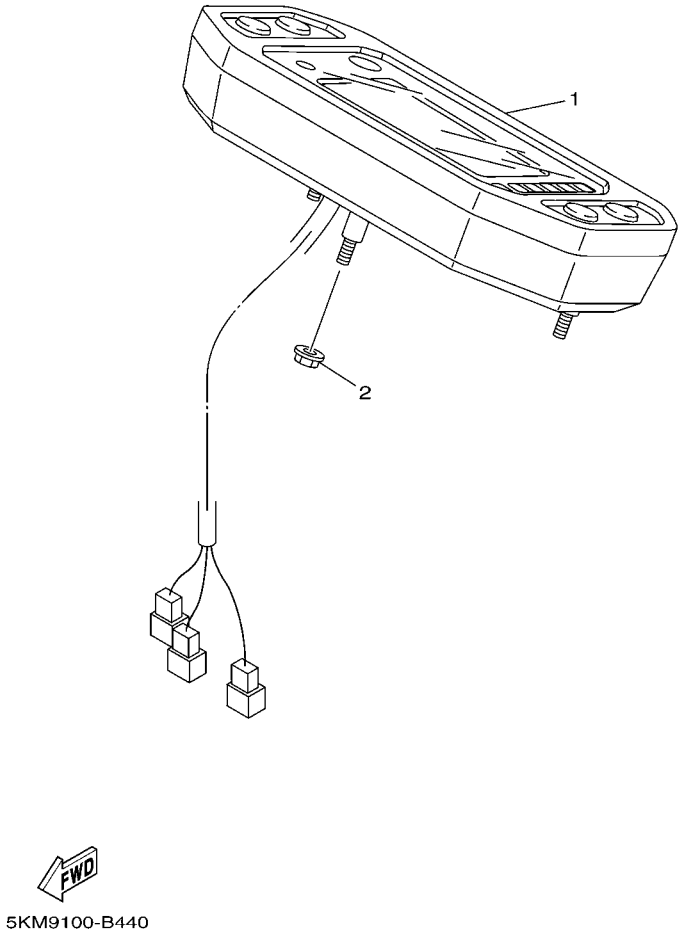

FIG. 46 METER

REF. NO.	PART NO.	DESCRIPTION	USA					REMARKS
1	5B4–83500–00	METER ASSY	1					MILE/H
2	95702–05500	NUT, WITH WASHER	3					

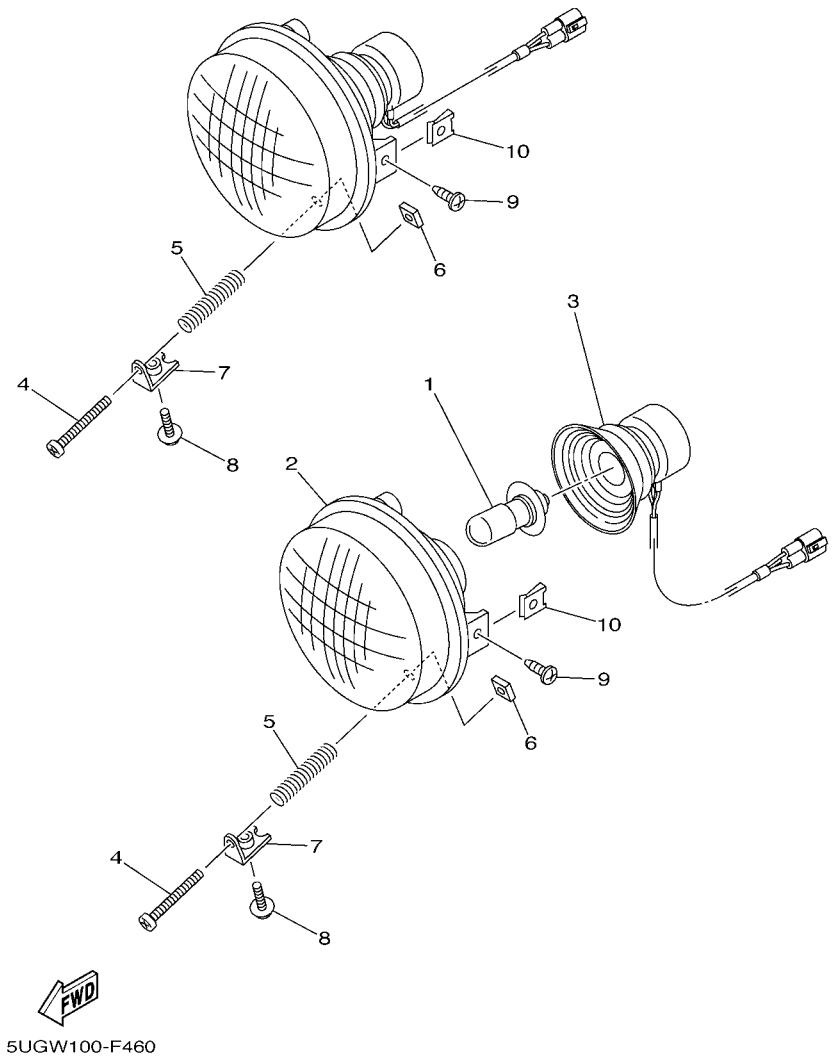

FIG. 47 HEADLIGHT

REF. NO.	PART NO.	DESCRIPTION	USA					REMARKS
1	4KB–84314–01	BULB (12V-30/30W)	2					
2	5KM–84320–01	LENS ASSY	2					
3	5EH–84340–00	SOCKET CORD ASSY 1	2					
4	98502–03540	SCREW, PAN HEAD	2					
5	2GU–84332–00	SPRING, SCREW	2					
6	2GU–84334–00	NUT, ADJUSTING	2					
7	5KM–84703–10	BRACKET	2					
8	90159–05044	SCREW, WITH WASHER	2					
9	98902–05016	SCREW, BIND	4					
10	90183–05008	NUT, SPRING	4					

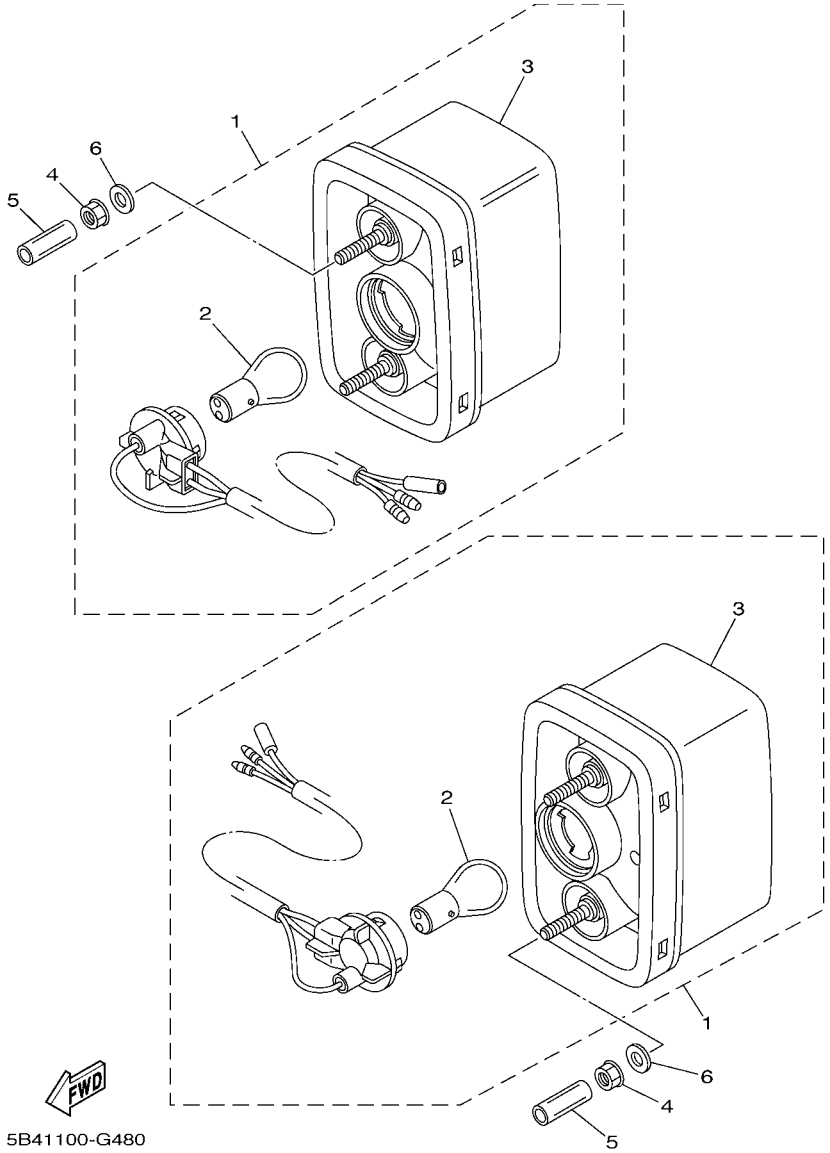

FIG. 48 TAILLIGHT

REF. NO.	PART NO.	DESCRIPTION	USA					REMARKS
1	5KM–84710–00	TAILLIGHT UNIT ASSY	2					
2	1A2–84714–41	.BULB (12V-21/5W)	1					
3	5KM–8472C–10	.LENS, CP.	1					
4	95702–06300	NUT, NYLON	4					
5	90445–09220	HOSE (L30)	4					
6	90201–06097	WASHER, PLATE	4					

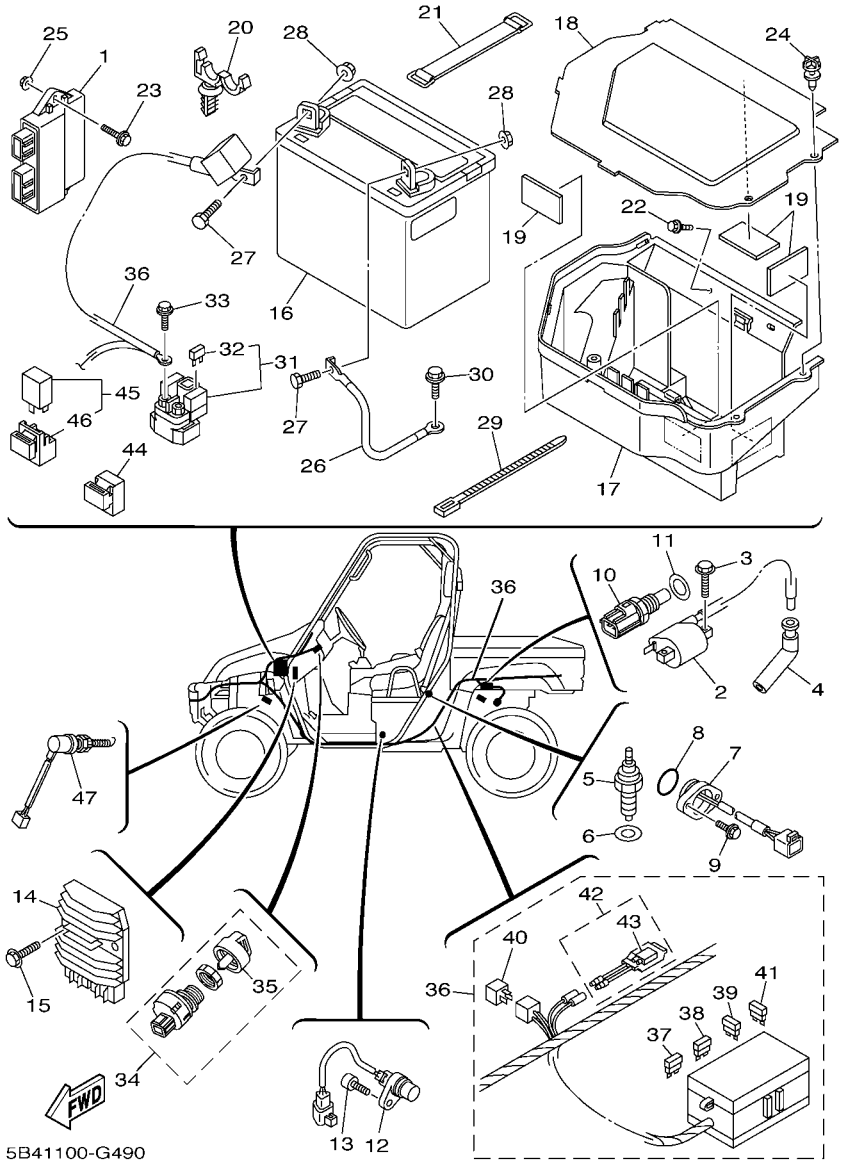

FIG. 49 ELECTRICAL 1

REF. NO.	PART NO.	DESCRIPTION	USA					REMARKS
1	5B4–8591A–00	ENGINE CONTROL UNIT ASSY	1					
2	5YU–82310–10	IGNITION COIL ASSY	1					
3	97002–06020	BOLT	2					
4	5B4–82370–00	PLUG CAP ASSY	1					
5	3GB–82540–01	NEUTRAL SWITCH ASSY	1					
6	90430–10148	GASKET	1					
7	3B4–82540–01	NEUTRAL SWITCH ASSY	1					
8	93210–29196	O-RING	1					
9	90119–06137	BOLT, WITH WASHER	2					
10	8CC–85790–01	THERMOSENSOR ASSY	1					
11	90430–12202	GASKET	1					
12	3B4–83755–00	SENSOR, SPEED	1					
13	91312–06020	BOLT	1					
14	1D7–81960–00	RECTIFIER & REGULATOR ASSY	1					
15	90105–06833	BOLT, FLANGE	2					
16	5UG–H2100–00	BATTERY ASSY (GS U1L-11)	1					
17	5B4–H212B–00	BOX, BATTERY 1	1					
18	5B4–H2129–00	COVER, BATTERY	1					
19	4XE–F4145–00	DAMPER, SIDE COVER	3					
20	90464–12830	CLAMP	2					
21	3L8–82131–01	BAND, BATTERY	1					
22	90119–06868	BOLT, WITH WASHER	4					
23	95812–06025	BOLT, FLANGE	1					
24	5UG–F3483–00	RIVET	2					
25	95702–06500	NUT, WITH WASHER	1					
26	5B4–H2116–00	WIRE, MINUS LEAD	1					
27	97080–08020	BOLT	2					

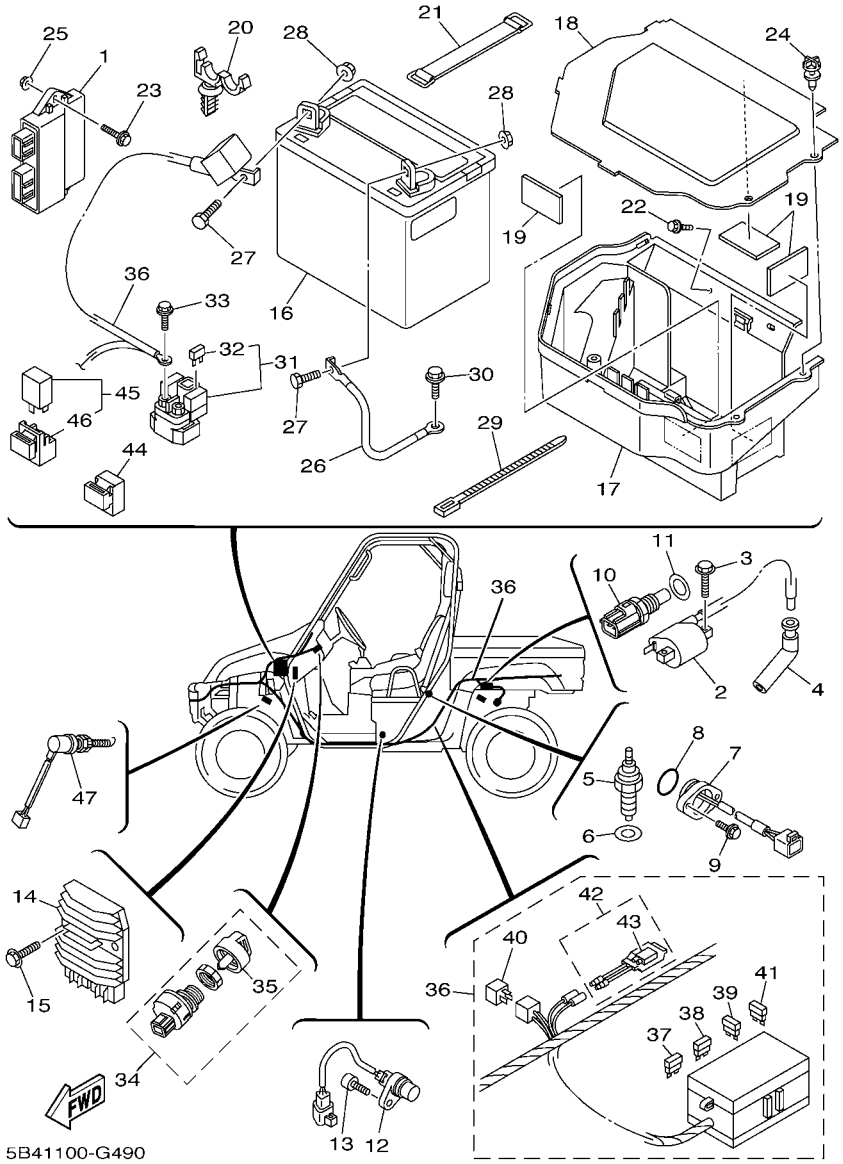

FIG. 49 ELECTRICAL 1

REF. NO.	PART NO.	DESCRIPTION	USA					REMARKS
28	90179–08015	NUT	2					
29	90464–31827	CLAMP	1					
30	95822–06014	BOLT, FLANGE	1					
31	5B4–81940–00	STARTER RELAY ASSY	1					
32	42X–82151–00	.FUSE (10A-BL)	2					
33	95022–06008	BOLT, FLANGE	2					
34	5UG–H2510–00	MAIN SWITCH ASSY	1					
35	5UG–H2579–00	.CAP, KEY	1					
36	5B4–82590–00	WIRE HARNESS ASSY	1					
37	5JJ–82151–10	.FUSE (15A-BL)	2					
38	5JJ–82151–30	.FUSE (10A-BL)	6					
39	5PS–82151–00	.FUSE (40A)	1					
40	4WA–81980–00	.DIODE ASSY	1					
41	5JJ–82151–70	.FUSE (25A-BL)	2					
42	5B4–82180–00	.CIRCUIT BREAKER ASSY	1					
43	5B4–82560–00	..THERMO SWITCH ASSY	1					
44	5DM–81950–00	RELAY ASSY (G8HN-1C4T-DJ-Y52)	3					
45	5EA–81950–20	RELAY ASSY	4					
46	5EA–81952–00	.HOLDER, RELAY	1					
47	4KB–82530–10	STOP SWITCH ASSY	1					

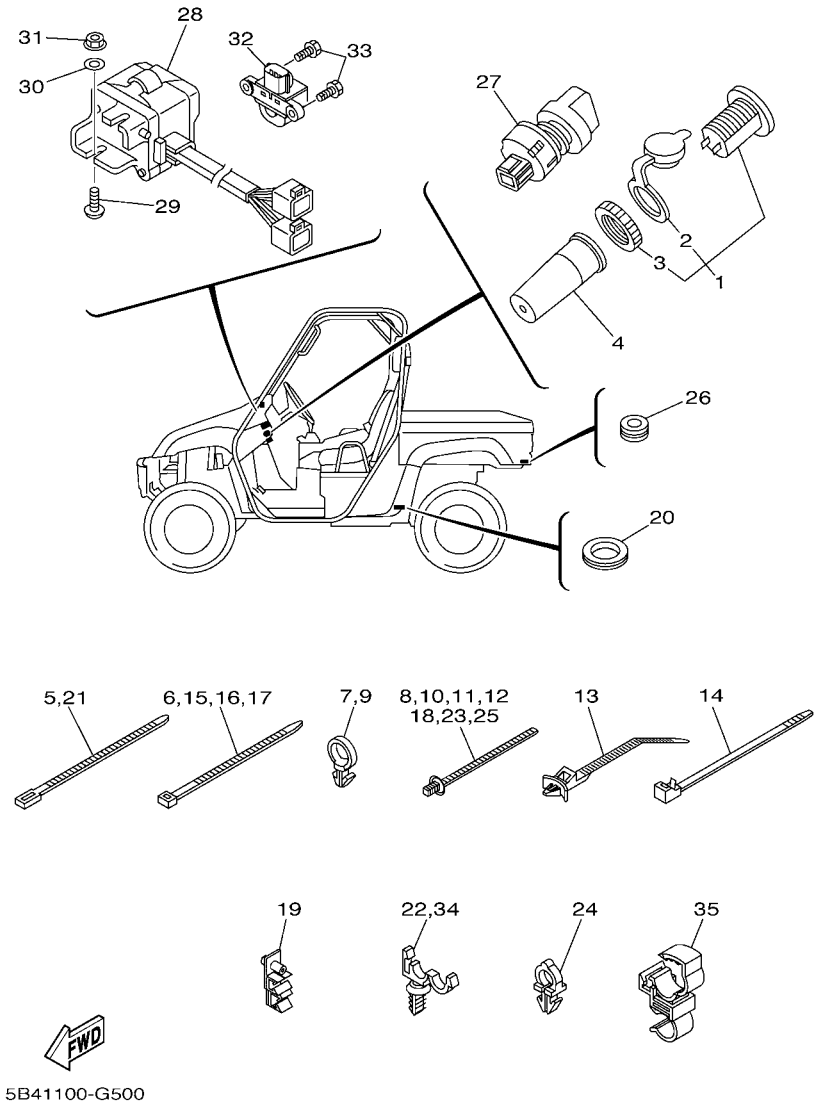

FIG. 50 ELECTRICAL 2

REF. NO.	PART NO.	DESCRIPTION	USA					REMARKS
1	5FU–H1920–10	TERMINAL ASSY	1					
2	5FU–H1942–10	.COVER	1					
3	5FU–H191B–10	.NUT	1					
4	5FU–H2599–01	COVER, CONNECTER	1					
5	90464–40825	CLAMP	4					
6	90464–48800	CLAMP	1					
7	90464–19815	CLAMP	1					
8	90464–20005	CLAMP	1					
9	90464–19815	CLAMP	2					
10	90464–20005	CLAMP	3					
11	90464–20005	CLAMP	3					
12	90464–20005	CLAMP	1					
13	90464–38800	CLAMP	1					
14	90464–51800	CLAMP	1					
15	90464–48800	CLAMP	1					
16	90464–48800	CLAMP	1					
17	90464–48800	CLAMP	1					
18	90464–20005	CLAMP	2					
19	5UG–F481H–00	CLAMP	2					
20	90480–25856	GROMMET	1					
21	90464–40825	CLAMP	1					
22	90464–12830	CLAMP	4					
23	90464–20005	CLAMP	2					
24	90464–10833	CLAMP	4					
25	90464–20005	CLAMP	4					
26	90480–15235	GROMMET	2					
27	5UG–H2526–00	SWITCH, LAMP	1					

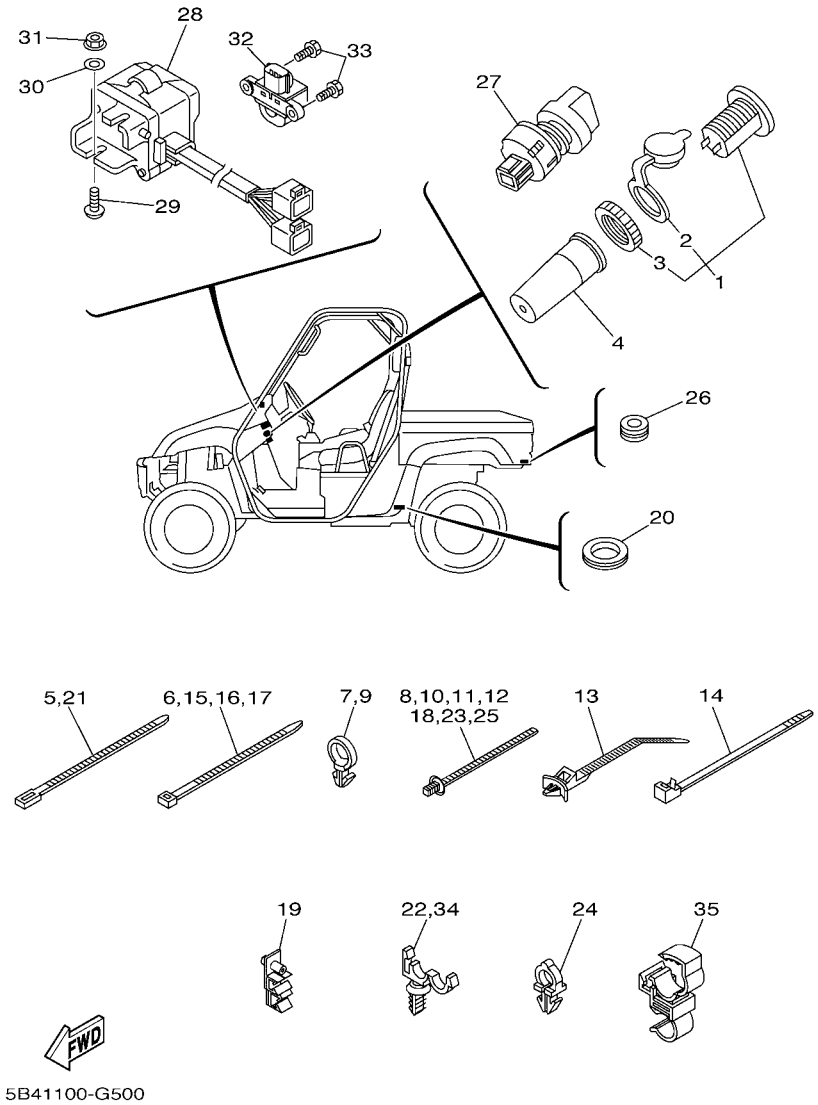

FIG. 50 ELECTRICAL 2

REF. NO.	PART NO.	DESCRIPTION	USA					REMARKS
28	5UG–83976–20	SWITCH, HANDLE 1	1					
29	90149–05299	SCREW	2					
30	90201–05042	WASHER, PLATE	2					
31	95702–05300	NUT, NYLON	2					
32	3B4–82576–00	LEAN ANGLE SENSOR	1					
33	JW1–F3394–00	BOLT, SPECIAL	2					
34	90464–12830	CLAMP	1					
35	90464–12012	CLAMP	1					

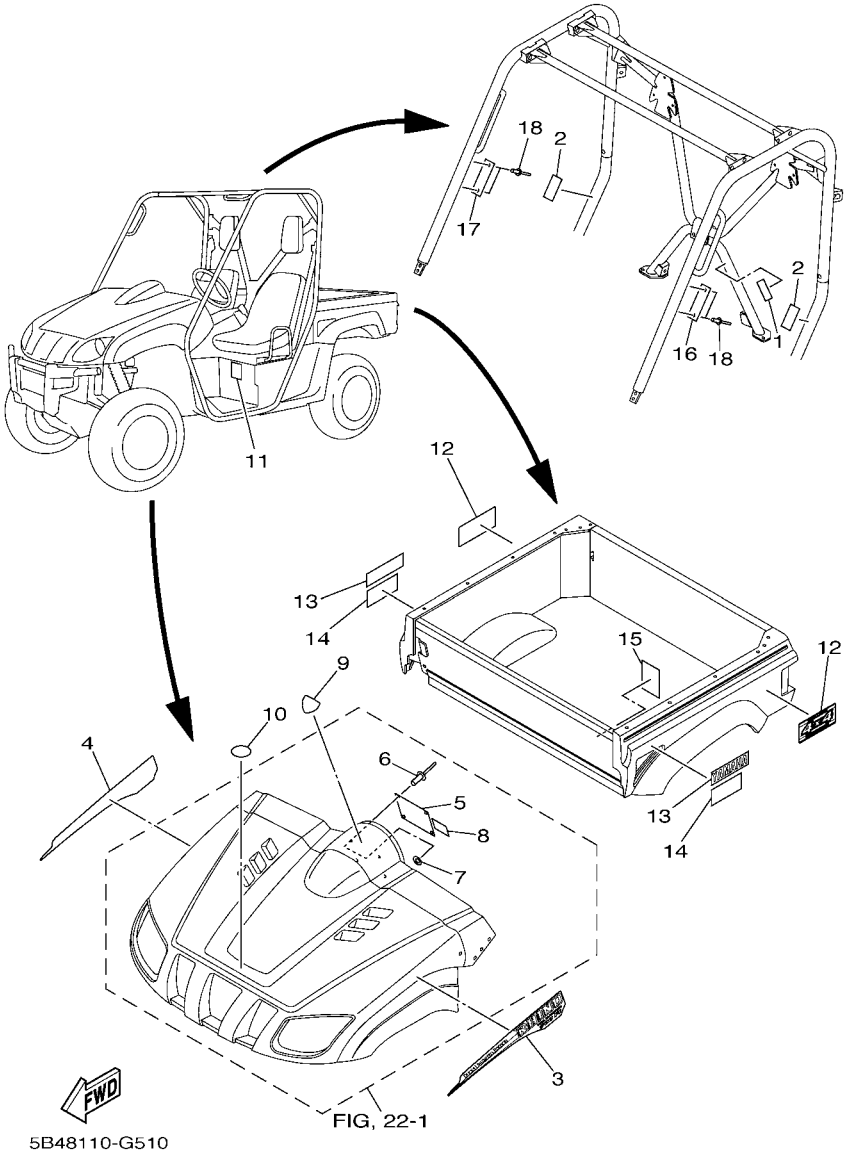

FIG. 51 EMBLEM & LABEL 1

REF. NO.	PART NO.	DESCRIPTION	USA					REMARKS
1	5B4–2179B–00	PLATE, EPA 3	1					
2	5B4–K8483–00	LABEL WARNING	2					ENGLISH
3	5B4–F1781–20	EMBLEM 1	1					
4	5B4–F1782–20	EMBLEM 2	1					
5	5B4–F1568–01	LABEL, WARNING	1					ENGLISH
6	4XE–F1539–10	RIVET	4					
7	4XE–F1549–00	WASHER, FENDER MOLD	4					
8	5B4–F1558–00	LABEL, WARNING 2	1					ENGLISH
9	2P5–F6232–00	EMBLEM 3D	1					
10	5UG–F1784–00	EMBLEM 4	1					
11	5B4–F1696–00	LABEL, CAUTION	1					ENGLISH
12	1D9–F163G–K0	EMBLEM 1	2					
13	5UG–F153A–30	EMBLEM, YAMAHA	2					
14	5B4–K7764–00	LABEL, WARNING 4	2					ENGLISH
15	5B4–F4897–00	EMBLEM	1					
16	5B4–K7761–00	LABEL, WARNING 1	1					ENGLISH
17	5B4–K7762–00	LABEL, WARNING 2	1					ENGLISH
18	4XE–F1539–10	RIVET	4					

PART NO.	REF. NO.
5B4–11102–00	1 – 1
5VK–1111F–00	5 – 7
4G0–11133–11	1 – 2
3B4–11165–00	1 – 12
5B4–11166–00	1 – 20
371–11167–01	1 – 13
3B4–11181–00	1 – 4
5B4–11185–00	1 – 11
1S3–11186–00	1 – 17
214–11198–01	8 – 5
	26 – 36
3B4–11311–10	2 – 1
1S3–11351–00	2 – 2
3B4–11400–00	3 – 1
3B4–11401–09	3 – 2
3B4–11402–09	3 – 3
3B4–11447–00	3 – 21
3B4–11454–00	3 – 22
3B4–11531–00	3 – 23
5KM–11536–10	3 – 7
5KM–11565–00	3 – 8
1S3–11603–10	3 – 17
1S3–11631–10	3 – 16
5VK–11633–00	3 – 18
1S3–11651–00	3 – 6
1S3–11681–00	3 – 4
5VK–12111–00	4 – 1
5VK–12113–00	4 – 3
3YF–12116–00	4 – 4
3YF–12117–01	4 – 6
4G0–12118–00	4 – 7
5H0–12119–00	4 – 5
5VK–12121–00	4 – 2
5VK–12146–00	4 – 10
5VK–12151–00	4 – 8
5XT–12159–00	4 – 11
5VK–12161–00	4 – 9
5B4–12170–00	5 – 1
1S3–12176–00	5 – 9
3TB–12210–00	5 – 15
4DW–12213–00	5 – 17
3B4–12221–00	8 – 14
3B4–12231–01	5 – 12
3B4–12241–00	5 – 13
1S3–12280–01	5 – 4
5VK–12284–00	5 – 2
1S3–12290–00	5 – 3
3B4–12411–00	7 – 1

PART NO.	REF. NO.
5B4–12413–00	7 – 2
5B4–12422–00	6 – 10
3B4–12428–00	6 – 17
11H–12438–10	6 – 15
5D3–1243K–00	6 – 13
3B4–12450–00	6 – 9
5KM–12469–00	6 – 6
5B4–12481–00	6 – 1
5B4–12577–00	6 – 4
3B4–13171–00	8 – 20
3B4–13300–00	8 – 1
3B4–13329–00	8 – 2
3B4–13354–00	3 – 24
3B4–13355–00	8 – 16
5B4–13416–00	9 – 3
5B4–13418–00	9 – 4
5GH–13440–20	8 – 6
5UG–13461–00	8 – 8
5B4–13487–00	14 – 31
25G–13490–00	8 – 26
1YW–13497–00	8 – 9
8FP–13556–00	11 – 7
5B4–13586–00	10 – 1
5B4–13750–00	11 – 1
5B4–13898–00	5 – 18
5B4–13907–00	30 – 4
5B4–13971–00	30 – 1
5LP–14147–00	11 – 3
1UY–14155–00	11 – 13
1S3–14161–00	11 – 2
1S4–14216–00	11 – 12
8CC–14216–10	11 – 5
5UG–14293–00	11 – 10
3B4–14424–00	10 – 31
4GY–1443E–00	20 – 23
5BF–1443E–00	10 – 20
	14 – 36
59V–14457–00	10 – 32
5YP–14562–00	11 – 14
3YF–14613–01	12 – 19
3B4–14714–00	12 – 2
	12 – 5
5UG–14737–00	12 – 12
3B4–15100–23	13 – 1
5B4–15112–00	13 – 8
3B4–15113–00	14 – 5
3B4–15163–00	16 – 3
2P5–15199–00	14 – 28

PART NO.	REF. NO.
3B4–15315–00	14 – 13
5KM–15351–00	14 – 26
5B4–15362–00	13 – 7
5UG–15371–00	25 – 19
3B4–15379–00	14 – 24
4WV–15381–00	14 – 21
11H–15383–02	18 – 3
3B4–15388–00	13 – 11
3B4–15411–00	14 – 1
5B4–15421–00	14 – 11
5B4–15431–00	14 – 23
3B4–15442–00	14 – 15
3B4–15451–00	14 – 2
3B4–15453–00	14 – 12
3B4–15463–00	16 – 12
3B4–15515–00	15 – 1
3B4–15517–00	15 – 4
3B4–15522–00	15 – 3
1S3–15560–00	15 – 5
5KM–15590–00	15 – 7
3B4–16181–00	3 – 20
3B4–16611–00	16 – 1
3B4–16620–00	16 – 2
4SH–16664–00	16 – 10
5B4–17223–00	17 – 20
3B4–17233–00	17 – 15
3B4–17243–00	17 – 26
3B4–17253–00	17 – 11
5B4–17285–00	17 – 18
3B4–17421–00	17 – 7
3B4–17432–00	17 – 25
3B4–17473–00	17 – 8
3B4–17520–00	17 – 29
5B4–17521–00	18 – 1
5B4–17530–01	18 – 9
3B4–17531–00	18 – 21
3B4–17531–10	18 – 21
3B4–17531–20	18 – 21
3B4–17531–30	18 – 21
3B4–17531–40	18 – 21
3B4–17531–50	18 – 21
5KM–17531–50	18 – 6
3B4–17531–60	18 – 21
5KM–17531–60	18 – 6
5KM–17531–70	18 – 6
5KM–17531–80	18 – 6
5KM–17531–90	18 – 6
5KM–17531–A0	18 – 6

PART NO.	REF. NO.
5KM–17531–B0	18 – 6
3B4–17551–00	18 – 10
5B4–17556–00	18 – 15
5B4–1755A–00	18 – 22
3B4–17582–00	17 – 13
5B4–17606–00	16 – 16
5B4–17611–00	16 – 27
3B4–17623–00	16 – 19
5B4–17632–00	16 – 18
4WV–17639–10	16 – 23
5B4–17641–00	16 – 26
4WV–17644–00	16 – 37
3B4–17645–00	16 – 21
2P5–17649–00	16 – 39
3B4–17653–00	16 – 20
3B4–17660–00	16 – 30
4CW–17664–00	16 – 34
3B4–17670–00	16 – 31
5B4–17679–00	16 – 40
5B4–17681–00	17 – 1
4WV–17684–00	16 – 36
3B4–17832–00	18 – 23
3B4–18103–10	20 – 8
5B4–18104–00	20 – 9
5B4–18115–00	20 – 18
3B4–18146–00	20 – 12
5KM–18191–00	20 – 7
4SH–18198–00	20 – 1
5UG–18300–10	20 – 21
3B4–18380–00	20 – 10
3B4–18511–00	19 – 6
5B4–18512–00	19 – 7
5B4–18531–00	19 – 8
5B4–18540–00	19 – 1
5KM–18542–00	19 – 3
4UN–18566–00	19 – 4
3B4–18581–00	13 – 3
5B4–21485–00	21 – 2
	21 – 3
5B4–2179B–00	51 – 1
1AA–21815–00	7 – 31
1AA–21874–00	7 – 32
5KM–22149–10	24 – 8
	28 – 12
5KM–23448–00	35 – 29
	36 – 31
5UG–23517–10	35 – 30
	36 – 32

PART NO.	REF. NO.
5KM–23526–00	24 – 5
	28 – 9
5KM–2385L–01	27 – 6
5KM–2385M–01	27 – 7
3B4–24380–10	30 – 22
2P5–24610–00	30 – 9
3B4–2511H–00	32 – 12
	33 – 12
3B4–2512J–00	32 – 14
	33 – 14
5KM–2536E–10	35 – 18
	36 – 18
5B4–25415–00	38 – 8
5UG–25719–00	40 – 5
5B4–2580T–00	34 – 6
5B4–2580U–00	34 – 13
5B4–2580V–00	37 – 5
5B4–2580W–00	37 – 13
5B4–25814–10	38 – 5
5B4–2581R–00	38 – 7
5B4–25833–00	38 – 14
5B4–2583T–00	40 – 1
5UG–25852–00	40 – 6
5UG–25853–00	40 – 7
5UG–25854–00	40 – 8
5UG–25855–00	40 – 9
5B4–2585F–00	38 – 27
5UG–25877–00	40 – 4
5UG–25878–00	40 – 3
5B4–25880–00	38 – 6
5UG–25880–00	40 – 12
5B4–25905–00	38 – 4
5B4–25913–00	38 – 10
3JD–25917–00	38 – 19
5B4–25919–00	38 – 25
3LD–25924–00	34 – 12
	34 – 19
	37 – 11
	37 – 19
5B4–25924–00	38 – 24
3JD–25926–00	38 – 18
1UY–25926–51	38 – 21
3LD–25934–01	34 – 11
	34 – 18
	37 – 10
	37 – 18
1UY–25937–51	38 – 20
1UY–25938–51	38 – 22

PART NO.	REF. NO.
5B4–25973–00	38 – 13
1UY–25973–51	38 – 15
5B4–25975–00	38 – 11
5B4–25976–00	38 – 9
5B4–25976–10	38 – 16
5B4–25976–20	38 – 17
5B4–25977–00	38 – 26
5B4–25978–00	38 – 12
5B4–26311–00	39 – 22
5B4–26341–00	39 – 31
128–27114–00	41 – 3
4X4–27114–00	41 – 2
4SS–27218–00	40 – 10
2YK–27222–00	40 – 11
5VY–27424–00	12 – 14
5GH–28349–00	22 – 12
5UG–46101–10	25 – 1
5KM–46102–00	25 – 3
2P5–46108–01	26 – 1
	26 – 29
3B4–46117–00	26 – 13
22U–46117–00–25	25 – 27
22U–46117–00–30	25 – 27
22U–46117–00–40	25 – 27
3B4–46117–10	26 – 13
3B4–46117–20	26 – 13
3B4–46117–30	26 – 13
24W–46118–00–12	25 – 16
24W–46118–00–14	25 – 16
24W–46118–00–16	25 – 16
24W–46118–00–18	25 – 16
24W–46118–00–20	25 – 16
5KM–46126–00	25 – 36
2HR–46127–00–25	25 – 14
2HR–46127–00–30	25 – 14
2HR–46127–00–35	25 – 14
2HR–46127–00–40	25 – 14
2HR–46127–00–45	25 – 14
2HR–46127–00–50	25 – 14
3B4–46134–00	26 – 17
3B4–46135–00	26 – 18
5GT–46136–00	26 – 43
5KM–46136–00	25 – 40
5GT–46137–00	26 – 44
5KM–46137–00	25 – 39
3B4–46141–00	26 – 10
3B4–46142–00	26 – 28
5UG–46144–00	25 – 13

PART NO.	REF. NO.
4WV–46145–10	26 – 23
4S1–46146–00	26 – 11
5UG–46151–01	25 – 2
5KM–46152–00	25 – 20
2HR–46156–00	25 – 21
5B4–46160–00	26 – 7
5B4–46161–00	26 – 9
5B4–46162–00	26 – 8
3B4–46163–00	26 – 20
3B4–46164–00	26 – 15
3B4–46166–00	26 – 16
3B4–4616A–00	26 – 22
5B4–46171–00	26 – 39
5GT–46187–00	26 – 4
	26 – 32
5UG–46212–00	25 – 7
3B4–46470–01	26 – 12
5KM–46559–00	25 – 38
3B4–47359–00	26 – 21
F1B–67747–00	30 – 7
8V0–77171–00	22 – 2
8M6–77175–00	22 – 27
5B4–81410–00	44 – 1
3B4–81450–00	44 – 2
3AJ–81801–00	45 – 2
3KS–81809–00	45 – 5
3AJ–81826–00	45 – 7
4XV–8182A–00	45 – 9
11H–81844–00	45 – 6
1FK–81847–00	45 – 3
4NK–81850–00	45 – 4
1S3–81890–00	45 – 1
5B4–81940–00	49 – 31
5DM–81950–00	49 – 44
5EA–81950–20	49 – 45
5EA–81952–00	49 – 46
1D7–81960–00	49 – 14
4WA–81980–00	49 – 40
371–82121–00	31 – 12
	31 – 23
5TG–82121–10	23 – 44
3L8–82131–01	49 – 21
42X–82151–00	49 – 32
5PS–82151–00	49 – 39
5JJ–82151–10	49 – 37
5JJ–82151–30	49 – 38
5JJ–82151–70	49 – 41
5B4–82180–00	49 – 42

PART NO.	REF. NO.
5YU–82310–10	49 – 2
5B4–82370–00	49 – 4
2C0–82380–10	11 – 9
4KB–82530–10	49 – 47
3B4–82540–01	49 – 7
3GB–82540–01	49 – 5
5B4–82560–00	49 – 43
3B4–82576–00	50 – 32
5B4–82590–00	49 – 36
5B4–83500–00	46 – 1
3B4–83755–00	49 – 12
5UG–83976–20	50 – 28
4KB–84314–01	47 – 1
5KM–84320–01	47 – 2
2GU–84332–00	47 – 5
2GU–84334–00	47 – 6
5EH–84340–00	47 – 3
5KM–84703–10	47 – 7
5KM–84710–00	48 – 1
1A2–84714–41	48 – 2
5KM–8472C–10	48 – 3
5B4–85701–00	30 – 5
8CC–85790–01	49 – 10
3B4–85885–00	11 – 6
8FP–85886–00	10 – 18
5B4–8591A–00	49 – 1
5B4–E2405–00	7 – 17
5B4–E244E–00	7 – 19
5B4–E2461–00	7 – 16
5B4–E2462–00	7 – 21
5B4–E246E–00	10 – 36
5B4–E2483–00	7 – 11
5B4–E2564–00	7 – 10
5UG–E2576–00	7 – 7
5B4–E2577–00	7 – 8
5B4–E2579–00	7 – 9
5B4–E2623–00	7 – 20
5B4–E2662–00	7 – 23
5B4–E2675–00	7 – 18
5B4–E3405–00	9 – 10
5B4–E3406–00	9 – 6
5B4–E3470–00	7 – 22
5B4–E4163–00	10 – 10
5B4–E4247–00	10 – 9
5B4–E4248–00	10 – 11
5B4–E4325–00	10 – 8
5B4–E4409–00	10 – 17
5B4–E4411–00	10 – 25

PART NO.	REF. NO.
5B4–E4412–00	10 – 26
5B4–E4426–00	10 – 13
5B4–E4429–00	10 – 15
5B4–E442F–00	10 – 16
5B4–E4437–00	10 – 27
5B4–E443A–00	10 – 7
5B4–E4442–00	10 – 12
5B4–E4449–00	10 – 14
5B4–E4451–00	10 – 28
5B4–E4453–00	10 – 5
5B4–E4454–00	10 – 23
5B4–E4455–00	10 – 6
	10 – 24
5B4–E4457–00	10 – 30
5B4–E4472–00	10 – 29
5B4–E4611–00	12 – 1
5B4–E4621–00	12 – 4
5B4–E4710–00	12 – 7
5B4–E4719–00	12 – 10
5B4–E4752–00	12 – 8
5B4–E4755–00	12 – 9
5B4–E5379–00	14 – 42
5B4–E5470–00	14 – 45
5B4–E5471–00	14 – 32
5B4–E5472–00	14 – 47
5B4–E5474–00	14 – 39
5B4–E5475–00	14 – 41
5B4–E5499–00	14 – 33
5B4–F1110–00	21 – 1
5UG–F114H–01	21 – 14
5UG–F114J–01	21 – 15
5UG–F116B–00	21 – 17
5UG–F139T–00	22 – 35
5B4–F1440–00	12 – 13
5B4–F146A–00	23 – 28
	23 – 47
5UG–F1494–00	22 – 38
5UG–F1510–D0	22 – 1
5UG–F151J–00	21 – 20
5B4–F151K–00	21 – 19
4XE–F1539–10	51 – 6
	51 – 18
5UG–F153A–30	51 – 13
4XE–F1549–00	51 – 7
5B4–F1558–00	51 – 8
5B4–F1568–01	51 – 5
1D9–F163G–K0	51 – 12
5B4–F1696–00	51 – 11

PART NO.	REF. NO.
5UG–F16A0–00	22 – 36
5B4–F1722–00	23 – 34
	23 – 53
5B4–F1738–00	23 – 43
	23 – 62
5B4–F1739–00	23 – 33
	23 – 52
5FU–F175B–01	22 – 13
5B4–F1781–20	51 – 3
5B4–F1782–20	51 – 4
5UG–F1784–00	51 – 10
5B4–F1797–00	23 – 27
	23 – 46
5UG–F1797–00	22 – 33
5UG–F1798–11	41 – 48
5B4–F1871–00	7 – 30
5B4–F197J–00	23 – 35
5B4–F197K–00	23 – 54
5B4–F1986–00	21 – 10
5B4–F2128–00	24 – 9
5B4–F2129–00	24 – 10
5B4–F2149–00	23 – 38
	23 – 57
5B4–F2171–00	24 – 1
5B4–F2172–00	24 – 2
5B4–F217M–00	24 – 3
5B4–F217N–00	24 – 4
5B4–F2210–00	27 – 1
5B4–F2417–00	22 – 39
5UG–F2417–00	42 – 2
5B4–F247A–00	7 – 33
5B4–F247B–00	7 – 35
5UG–F2548–01	39 – 12
5UG–F254J–11	23 – 13
5UG–F254K–11	23 – 15
5B4–F2864–00	23 – 26
5B4–F2868–00	23 – 45
5B4–F2873–00	23 – 10
5B4–F2875–00	23 – 11
5B4–F2878–00	23 – 12
5B4–F2898–00	21 – 24
5B4–F2929–00	23 – 31
	23 – 50
5B4–F3123–00	28 – 18
5UG–F3139–00	22 – 37
5UG–F3183–00	29 – 3
5UG–F3192–01	40 – 21
	40 – 23

PART NO.	REF. NO.
5UG–F3312–D0	22 – 24
5B4–F3350–00	28 – 15
5UG–F3391–02	22 – 21
5UG–F3394–00	31 – 30
JW1–F3394–00	50 – 33
5UG–F3400–00	29 – 1
5B4–F3421–00	14 – 35
5B4–F3447–00	23 – 29
	23 – 48
5UG–F3447–00	22 – 17
5UG–F3483–00	10 – 37
	49 – 24
5UG–F3489–00	29 – 10
5UG–F3501–11	32 – 18
5UG–F3502–11	33 – 18
5UG–F3527–00	29 – 11
5UG–F3540–00	28 – 1
5FU–F3549–00	28 – 2
	28 – 5
	32 – 23
	33 – 23
5UG–F3550–00	28 – 4
5UG–F357A–00	28 – 7
5UG–F358A–00	28 – 8
5UG–F3811–00	29 – 17
5UG–F3812–00	29 – 4
5UG–F3818–10	29 – 24
4XE–F3833–00	29 – 14
5UG–F3838–10	29 – 21
5UG–F3840–00	29 – 15
5UG–F3841–00	29 – 13
5UG–F3844–00	29 – 9
5UG–F3863–00	29 – 2
5UG–F386G–00	27 – 9
5UG–F386H–00	27 – 10
5UG–F387F–00	29 – 7
5UG–F387G–00	29 – 5
5UG–F387J–00	29 – 8
5UG–F387K–00	29 – 6
5B4–F389E–00	23 – 42
	23 – 61
5UG–F389E–00	41 – 24
5B4–F389F–00	23 – 36
	23 – 55
5B4–F4103–00	21 – 12
5B4–F4111–00	30 – 3
5B4–F4113–10	23 – 22
5B4–F4141–00	23 – 20

PART NO.	REF. NO.
4XE–F4145–00	49 – 19
5B4–F4145–00	30 – 15
5UG–F414H–00	30 – 13
5UG–F414J–00	30 – 14
5B4–F4157–00	30 – 11
5B4–F41A4–00	23 – 24
5B4–F41A5–00	23 – 25
5B4–F4312–00	30 – 18
5B4–F4314–00	30 – 20
5UG–F4669–00	41 – 30
5UG–F470E–01	31 – 3
	31 – 13
5UG–F470F–00	31 – 2
5UG–F4710–00	31 – 1
5UG–F472L–50	31 – 33
5UG–F4735–01	31 – 31
4XE–F4747–00	31 – 11
	31 – 22
5B4–F474A–00	31 – 35
2P5–F474W–00	31 – 14
5B4–F4773–00	31 – 37
5UG–F4796–00	31 – 27
5UG–F481H–00	50 – 19
5UG–F483J–00	41 – 52
2P5–F4850–02	41 – 1
5UG–F4867–00	41 – 12
	41 – 19
5B4–F4897–00	51 – 15
5B4–F510F–00	32 – 7
	33 – 7
5B4–F510G–00	32 – 8
	33 – 8
5B4–F510H–00	32 – 9
	33 – 9
5B4–F510J–00	32 – 10
	33 – 10
5UG–F510U–00	32 – 16
	33 – 16
	35 – 17
	36 – 17
5UG–F5111–10	32 – 25
	33 – 25
5B4–F511G–00	32 – 11
	33 – 11
	35 – 16
	36 – 16
5UG–F511H–00	35 – 14
	36 – 14

PART NO.	REF. NO.
2P5–F512A–00	32 – 5
	33 – 5
	35 – 21
	36 – 21
5B4–F512G–00	32 – 13
	33 – 13
	35 – 15
	36 – 15
5UG–F512H–00	32 – 15
	33 – 15
	35 – 12
	36 – 12
5UG–F512J–00	35 – 13
	36 – 13
5UG–F514A–00	32 – 29
	33 – 29
5UG–F5180–00	32 – 1
	33 – 1
5B4–F518F–00	32 – 6
	33 – 6
5B4–F530F–00	35 – 22
5B4–F530T–00	35 – 8
5B4–F530U–00	36 – 8
5UG–F530V–02	35 – 9
5UG–F530W–02	36 – 9
5B4–F530X–00	35 – 10
	36 – 10
5UG–F530Y–01	35 – 11
	36 – 11
5B4–F5311–00	35 – 4
	36 – 4
5B4–F531H–00	35 – 7
5B4–F532F–00	36 – 22
5UG–F5390–00	35 – 1
	36 – 1
5B4–F53B0–00	36 – 7
5B4–F5690–00	39 – 26
5B4–F5711–00	38 – 1
5B4–F5718–10	35 – 34
	36 – 29
5B4–F582T–00	34 – 1
	34 – 3
5B4–F5831–00	37 – 1
	37 – 3
5B4–F5871–00	40 – 28
5B4–F5872–00	40 – 17
5B4–F5873–00	40 – 30
5ND–F5875–01	39 – 29

PART NO.	REF. NO.
5ND–F5875–01	40 – 19
5B4–F5882–01	40 – 16
2P5–F6123–00	41 – 7
2P5–F6232–00	51 – 9
5B4–F6241–00	31 – 36
5B4–F6372–00	39 – 34
5UG–F7114–00	21 – 23
5UG–F7200–00	39 – 18
5UG–F7286–00	39 – 10
5UG–F7411–10	39 – 1
5B4–F7413–00	39 – 3
5UG–F7421–10	39 – 9
5B4–F7801–00	39 – 14
5B4–F8100–00	21 – 21
5B4–F8108–00	23 – 9
5UG–F811A–00	21 – 22
5B4–F8238–00	39 – 4
5B4–F8268–00	39 – 5
5UG–F8309–11	22 – 11
5UG–F8329–01	42 – 8
	42 – 11
2P5–F8385–01	42 – 7
5UG–F8395–01	42 – 10
5UG–F8415–00	41 – 50
5UG–F842A–00	42 – 5
2P5–F845N–20	42 – 1
5UG–F849R–00	41 – 25
5UG–G5158–10	39 – 35
5B4–G6172–00	25 – 34
5UG–G6241–00	31 – 25
5UG–G6242–00	31 – 26
5UG–G7491–00	27 – 5
5UG–H1815–02	45 – 8
5FU–H191B–10	50 – 3
5FU–H1920–10	50 – 1
5FU–H1942–10	50 – 2
5UG–H2100–00	49 – 16
5B4–H2116–00	49 – 26
5B4–H2129–00	49 – 18
5B4–H212B–00	49 – 17
5UG–H2510–00	49 – 34
5UG–H251S–00	39 – 27
5UG–H2526–00	50 – 27
5UG–H2579–00	49 – 35
5FU–H2599–01	50 – 4
2P5–K7175–00	41 – 39
2P5–K7180–00	41 – 46
2P5–K7185–00	41 – 42

PART NO.	REF. NO.
5UG–K7195–01	41 – 32
2P5–K7515–00	23 – 30
	23 – 49
	41 – 43
5B4–K7519–00	23 – 41
	23 – 60
5UG–K7519–00	43 – 4
	43 – 10
	43 – 19
5UG–K7526–00	23 – 40
	23 – 59
	43 – 6
	43 – 12
5B4–K7561–00	23 – 17
5UG–K7573–00	43 – 5
	43 – 11
	43 – 20
5UG–K7736–00	22 – 31
5B4–K7761–00	51 – 16
5B4–K7762–00	51 – 17
5B4–K7764–00	51 – 14
5UG–K810F–01	23 – 1
5UG–K810G–01	23 – 5
5UG–K810N–20	41 – 23
5UG–K818M–00	41 – 47
5UG–K8193–D0	41 – 9
5UG–K8194–D0	41 – 16
5UG–K830A–51	43 – 17
5UG–K830B–51	43 – 21
5UG–K831A–51	43 – 1
5UG–K831E–51	43 – 7
5UG–K8336–20	43 – 15
5UG–K8365–00	41 – 28
5UG–K8392–20	43 – 13
5B4–K8483–00	51 – 2
5B4–R169A–00	35 – 26
	36 – 26
GH1–U3774–00	31 – 10
	31 – 21
F1B–U3850–02	31 – 7
	31 – 18
5B4–U7773–00	30 – 6
5UG–W0042–00	40 – 2
5B4–W0045–00	34 – 9
	37 – 8
5B4–W0045–10	34 – 16
	37 – 16
5B4–W0046–00	38 – 23

PART NO.	REF. NO.
3JD–W0047–00	34 – 8
	34 – 15
3LC–W0047–50	37 – 7
	37 – 15
1UY–W0048–50	34 – 10
	34 – 17
	37 – 9
	37 – 17
3LD–W0057–00	34 – 7
	34 – 14
5B4–W0057–00	37 – 6
	37 – 14
5UG–Y4612–00	25 – 5
90105–06078	5 – 8
90105–06082	5 – 14
	8 – 15
	13 – 12
90105–06176	20 – 17
90105–06639	21 – 5
	21 – 9
90105–06831	21 – 18
	21 – 25
	31 – 40
	39 – 33
	41 – 49
90105–06832	9 – 8
	9 – 12
	42 – 9
	42 – 12
90105–06833	7 – 14
	7 – 26
	10 – 34
	40 – 18
	40 – 31
	49 – 15
90105–07004	5 – 5
	5 – 10
90105–08129	40 – 13
90105–08867	21 – 13
	21 – 16
	30 – 16
90105–08879	30 – 12
90105–10220	25 – 46
90105–10230	26 – 47
90105–10265	34 – 5
	37 – 12
	37 – 20
90105–10267	24 – 6

PART NO.	REF. NO.
90105–10267	28 – 10
90105–10277	35 – 31
	36 – 33
90105–10314	21 – 8
90105–10402	38 – 28
90105–10841	28 – 17
90105–12055	27 – 3
90105–12056	27 – 2
90105–14003	19 – 13
90109–060F3	41 – 34
90109–06172	10 – 22
	14 – 44
90109–063F5	31 – 34
90109–08082	34 – 2
	34 – 4
	37 – 2
	37 – 4
90109–09002	1 – 6
90109–09003	1 – 5
90109–09005	1 – 7
90110–05031	14 – 6
	44 – 4
90110–06200	41 – 11
	41 – 18
90110–06228	38 – 2
90110–08091	18 – 8
90111–10802	43 – 14
	43 – 16
	43 – 18
90111–10803	43 – 2
	43 – 8
90114–10016	32 – 26
	33 – 26
	35 – 5
	36 – 5
90119–05023	22 – 15
	22 – 23
	23 – 4
	23 – 8
	39 – 7
90119–06137	49 – 9
90119–06868	7 – 37
	22 – 25
	24 – 11
	42 – 6
	49 – 22
90119–08125	25 – 15
90119–10023	2 – 3

PART NO.	REF. NO.
90149–05016	19 – 5
90149–05299	50 – 29
90149–06280	32 – 30
	33 – 30
90149–08013	18 – 4
90149–08018	15 – 8
90150–06021	35 – 35
	36 – 30
90157–04006	16 – 24
90159–05044	47 – 8
90164–04800	22 – 32
90164–05800	22 – 34
90167–05025	41 – 31
90167–05030	41 – 29
90167–06800	39 – 6
	41 – 8
90170–06128	4 – 12
90170–08358	20 – 19
90170–18003	3 – 26
90170–36279	16 – 38
90171–12001	28 – 13
	29 – 19
90179–08015	49 – 28
90179–10022	32 – 4
	33 – 4
	35 – 6
	36 – 6
90179–12325	25 – 12
90179–16004	3 – 14
90179–16005	16 – 29
	16 – 41
90179–16006	18 – 17
	18 – 25
90179–22013	18 – 7
90179–22021	16 – 11
90179–24003	32 – 28
	33 – 28
	35 – 20
	36 – 20
90179–55660	18 – 26
90179–60001	18 – 12
90179–65305	25 – 9
90183–05008	23 – 3
	23 – 7
	47 – 10
90183–050A0	22 – 16
90183–051A1	22 – 22
	39 – 8

PART NO.	REF. NO.
90183–06053	28 – 19
90183–08800	22 – 18
90185–10011	25 – 47
	26 – 48
90185–10012	24 – 7
	27 – 8
	28 – 11
	28 – 16
	31 – 24
	35 – 32
	36 – 34
90185–12008	29 – 22
90185–12009	27 – 4
90201–047R9	16 – 25
90201–05042	50 – 30
90201–06033	7 – 27
90201–06036	20 – 5
	20 – 16
90201–06097	22 – 30
	48 – 6
90201–06557	22 – 4
	22 – 9
90201–08034	12 – 16
90201–08087	25 – 22
90201–10035	25 – 48
	26 – 46
	26 – 49
	27 – 12
	35 – 33
	36 – 35
90201–10118	40 – 27
	40 – 34
90201–109U6	31 – 41
90201–11801	31 – 32
90201–12029	25 – 11
90201–12049	41 – 5
90201–132G5	20 – 3
90201–15018	39 – 15
	39 – 19
90201–150U6	17 – 27
90201–16013	3 – 13
90201–16021	18 – 16
	18 – 24
90201–170U8	17 – 22
90201–190T7	16 – 28
90201–20028	17 – 19
90201–20266	26 – 41
90201–25290	17 – 9

PART NO.	REF. NO.
90201–286K9	15 – 2
90201–46M28	18 – 5
90214–22007	17 – 16
90215–10008	8 – 18
90215–18001	3 – 27
90240–08005	40 – 14
90240–12002	41 – 4
90240–13802	22 – 19
90267–48820	39 – 2
90269–06800	14 – 34
	14 – 38
	22 – 26
	23 – 2
	23 – 6
	23 – 14
	23 – 16
	23 – 18
	23 – 21
	23 – 23
	39 – 11
	39 – 36
	41 – 10
	41 – 17
90269–06804	22 – 14
90269–08813	14 – 46
90280–05001	3 – 12
90282–05007	3 – 25
90340–10001	26 – 24
90340–14011	14 – 9
90340–14029	26 – 35
90340–14036	19 – 15
90340–14132	8 – 4
90340–20143	25 – 17
90340–36002	14 – 7
90380–10002	15 – 6
90381–17067	35 – 27
	36 – 27
90387–06089	23 – 32
	23 – 51
90387–06131	7 – 28
90387–0613B	20 – 2
90387–06210	31 – 39
90387–06241	22 – 3
90387–062M9	22 – 6
90387–066J1	41 – 37
90387–077M3	22 – 7
90387–08023	10 – 35
90387–08039	12 – 17

PART NO.	REF. NO.
90387–20021	17 – 21
90387–250R3	17 – 14
90387–26001	17 – 4
90387–30008	32 – 22
	33 – 22
	35 – 25
	36 – 25
90401–08004	1 – 22
90401–10015	8 – 23
	40 – 26
	40 – 33
90401–14118	8 – 21
90401–20162	8 – 7
90430–06014	6 – 19
	7 – 3
90430–08119	1 – 23
90430–10003	26 – 25
90430–10148	49 – 6
90430–10171	25 – 32
90430–10188	8 – 24
90430–12202	49 – 11
90430–14043	8 – 22
90430–14194	19 – 14
	19 – 16
90445–070G6	26 – 37
90445–07340	6 – 20
90445–074F6	25 – 41
90445–09220	48 – 5
90450–22017	9 – 5
	9 – 9
90450–32015	6 – 5
90450–59009	10 – 4
90450–72004	10 – 2
90460–85135	14 – 40
	14 – 43
	14 – 48
90461–08802	39 – 32
90461–12800	7 – 13
90462–10048	20 – 14
90462–10049	14 – 30
90462–15800	9 – 7
	9 – 11
90464–10233	10 – 38
90464–10833	7 – 34
	25 – 45
	50 – 24
90464–12012	30 – 2
	50 – 35

PART NO.	REF. NO.
90464–12830	25 – 43
	30 – 10
	39 – 25
	49 – 20
	50 – 22
	50 – 34
90464–13103	30 – 19
90464–19815	25 – 44
	50 – 7
	50 – 9
90464–20005	7 – 15
	39 – 23
	40 – 25
	40 – 29
	40 – 32
	50 – 8
	50 – 10
	50 – 11
	50 – 12
	50 – 18
	50 – 23
	50 – 25
90464–25826	30 – 17
90464–29179	7 – 36
90464–31827	49 – 29
90464–38800	50 – 13
90464–40825	39 – 24
	50 – 5
	50 – 21
90464–48800	23 – 19
	50 – 6
	50 – 15
	50 – 16
	50 – 17
90464–51800	50 – 14
90467–07029	25 – 42
	26 – 38
90467–07093	6 – 21
90467–08003	7 – 38
90467–10008	30 – 21
90467–140A4	1 – 21
90467–15012	10 – 3
	20 – 24
90467–160A4	10 – 21
90467–16195	14 – 37
90467–220A1	10 – 33
90467–26189	7 – 12
90468–16191	22 – 20

PART NO.	REF. NO.
90480–13018	14 – 25
90480–15058	30 – 23
90480–15235	22 – 8
	41 – 35
	41 – 40
	50 – 26
90480–15363	7 – 25
90480–17800	7 – 29
90480–18290	41 – 36
90480–25856	50 – 20
90501–06022	19 – 2
90501–082E3	8 – 10
90501–10353	19 – 12
90501–140A2	19 – 9
90501–18002	25 – 33
90501–220A1	3 – 9
90501–235L9	26 – 42
90501–650A0	16 – 35
90506–16451	41 – 41
90506–20192	39 – 17
	39 – 21
90506–26010	12 – 3
	12 – 6
90508–35764	20 – 4
91312–06012	6 – 2
	8 – 25
	13 – 10
91312–06016	9 – 2
91312–06020	6 – 7
	49 – 13
91312–06025	5 – 16
91312–06030	1 – 8
91312–06040	2 – 4
91312–08040	13 – 6
91402–20020	29 – 20
	40 – 15
91402–25020	28 – 14
91402–30025	41 – 6
92012–06030	44 – 3
92507–06010	11 – 8
92507–06012	11 – 4
92902–06100	41 – 13
	41 – 20
92902–06600	8 – 11
92902–08600	18 – 20
	25 – 29
92902–12200	29 – 23
93101–10090	6 – 14

PART NO.	REF. NO.
93101–12168	14 – 20
93101–35001	16 – 17
93102–15212	20 – 11
93102–30010	18 – 14
	18 – 27
93102–35004	16 – 5
93102–35009	25 – 8
93102–42004	17 – 6
93102–65008	25 – 24
93104–41119	16 – 32
93105–46001	26 – 19
93106–38046	32 – 20
	33 – 20
93106–38047	32 – 21
	33 – 21
93106–38800	35 – 28
	36 – 28
93106–42800	35 – 24
	36 – 24
93210–10096	8 – 27
93210–10197	9 – 1
93210–14369	14 – 10
93210–19123	25 – 18
93210–21190	6 – 3
93210–21631	13 – 9
93210–26001	17 – 5
93210–27666	32 – 27
	33 – 27
	35 – 19
	36 – 19
93210–29196	49 – 8
93210–33786	6 – 8
93210–357A3	14 – 8
93210–41042	7 – 6
93210–44545	16 – 33
93210–57428	8 – 13
93210–626A7	25 – 10
93210–78544	1 – 18
	18 – 18
93210–96601	1 – 14
93211–51749	25 – 26
93211–594A4	16 – 22
93306–00006	6 – 12
93306–00426	17 – 2
93306–00613	26 – 14
93306–006Y4	32 – 19
	33 – 19
93306–07209	5 – 6

PART NO.	REF. NO.
93306–07801	17 – 3
93306–20120	14 – 19
93306–20309	17 – 24
93306–20464	17 – 23
93306–20654	18 – 13
93306–206Y2	35 – 23
	36 – 23
93306–30438	3 – 29
	17 – 30
93306–30534	3 – 28
93306–30537	18 – 2
93306–30574	25 – 6
93306–30810	3 – 15
93306–37206	18 – 11
93310–32590	17 – 10
93310–84017	3 – 5
93315–21813	16 – 8
93316–01003	16 – 4
93316–01701	25 – 25
93317–85569	25 – 4
93399–99948	26 – 2
	26 – 5
	26 – 30
	26 – 33
93410–22039	25 – 37
93410–46079	16 – 7
93420–13073	8 – 12
93430–12008	39 – 16
	39 – 20
93440–15012	17 – 28
93440–20088	26 – 3
	26 – 6
	26 – 31
	26 – 34
93440–25084	17 – 12
	17 – 17
93450–22119	32 – 17
	33 – 17
93450–24062	16 – 9
93450–24154	3 – 19
93503–08007	19 – 11
93604–10011	6 – 22
93606–09002	3 – 10
93612–16254	1 – 10
93900–00813	32 – 3
	33 – 3
	35 – 3
	36 – 3

PART NO.	REF. NO.
94108–12809	32 – 2
	33 – 2
94110–12805	35 – 2
	36 – 2
94580–31074	8 – 19
94591–57126	5 – 11
94701–00420	1 – 9
95022–06008	49 – 33
95022–06010	6 – 18
	7 – 4
95022–06012	1 – 15
95022–06016	14 – 22
95022–06020	1 – 16
	1 – 19
	7 – 5
	20 – 13
95022–06030	6 – 11
	13 – 4
	14 – 4
	16 – 14
	45 – 10
95022–06040	8 – 3
	16 – 15
95022–06050	6 – 23
	6 – 24
95022–06060	13 – 5
95022–08025	29 – 16
95022–10016	25 – 31
95022–10025	29 – 12
95302–06800	22 – 10
95302–08700	20 – 20
95307–06800	41 – 14
	41 – 21
95312–10600	8 – 17
95602–05200	23 – 39
	23 – 58
95602–06100	30 – 8
95602–06200	31 – 9
	31 – 20
95602–08200	31 – 5
	31 – 16
	41 – 51
95602–10200	21 – 4
	21 – 6
	31 – 28
	43 – 3
	43 – 9
95612–06100	38 – 3

PART NO.	REF. NO.
95612–08625	1 – 3
95702–05300	50 – 31
95702–05500	46 – 2
95702–06300	22 – 28
	48 – 4
95702–06500	7 – 24
	41 – 45
	49 – 25
95702–08500	12 – 18
	25 – 23
	41 – 44
95802–06012	28 – 20
95802–08012	20 – 22
95802–08045	12 – 15
95812–06014	26 – 26
	39 – 28
95812–06025	49 – 23
95812–06035	20 – 6
95812–08014	12 – 11
	27 – 11
95812–08016	29 – 18
95812–08020	39 – 13
95812–08030	31 – 4
	31 – 15
95812–08040	26 – 27
95812–10016	43 – 22
95812–10020	21 – 11
	42 – 3
95812–10022	31 – 29
95812–10025	25 – 30
95812–10030	26 – 45
95812–10035	21 – 7
95812–12025	42 – 4
95817–06016	41 – 15
	41 – 22
	41 – 33
95822–06012	14 – 29
	39 – 30
	40 – 20
95822–06014	49 – 30
95822–06016	40 – 22
	40 – 24
95822–06020	14 – 27
95822–06025	41 – 26
	41 – 27
	41 – 38
95822–06030	14 – 14
	14 – 17

PART NO.	REF. NO.
95822–06040	14 – 18
	31 – 8
	31 – 19
95822–08020	31 – 6
	31 – 17
97002–06020	49 – 3
97022–08025	25 – 28
97022–08030	18 – 19
97080–08020	49 – 27
97702–50520	10 – 19
98502–03540	47 – 4
98507–04006	11 – 11
98902–05016	47 – 9
98907–05020	23 – 37
	23 – 56
98907–06020	31 – 38
98907–06035	22 – 5
	22 – 29
99009–10400	6 – 16
99009–12400	19 – 10
99009–19400	25 – 35
	26 – 40
99009–32400	28 – 3
	28 – 6
	32 – 24
	33 – 24
99009–35400	3 – 11
99009–80500	16 – 6
99530–08012	20 – 15
99530–10116	13 – 2
	14 – 3
	14 – 16
	16 – 13
99530–14016	13 – 13

PART NO.	REF. NO.

PART NO.	REF. NO.